SUNJOE®

ELECTRIC LOG SPLITTER

15 AMP | HYDRAULIC | 5 TON

OPERATOR'S MANUAL

A Division of Snow Joe®, LLC

Model LJ602E

Form No. SJ-LJ602E-880E-MR1

IMPORTANT!

Safety Instructions

All Operators Must Read These Instructions Before Use

Always follow these safety guidelines. Failure to do so may result in serious bodily injury or death.

General Safety Warnings!

When using the log splitter, basic safety precautions should always be followed to reduce the risk of fire, electric shock, and personal injury, including the following:

⚠**WARNING!** The use of any other accessory or attachment might increase the risk of injury.

TRAINING

Before using the log splitter, take the time to familiarize yourself with the controls, especially how to stop the log splitter in an emergency. Only individuals who have read these instructions and have a thorough understanding of these instructions shall operate the log splitter. Never allow children to operate the log splitter.

Retain this manual for future reference and reread it at the start of each log splitting season.

1. Read, understand, and follow all instructions on the log splitter and in the manual(s) before attempting to assemble and operate. Save this manual for reference and ordering replacement parts.
2. Never allow children under 18 years old to operate this machine. Children 18 years old and over should be trained and supervised by an adult who understands the operation of the log splitter.
3. Never allow an untrained individual to operate the log splitter.
4. Understand the function of all the controls and their proper operation. Know how to stop the machine in case of emergency.

PREPARATION

Work Area

1. Plan your log splitting pattern to avoid discharge of material toward people, pets, and property. Thrown objects can cause serious personal injury.
2. Always inspect the area where the log splitter is to be used. Ensure the surface the machine is on is 23.6 inch – 29.5 inch (60 cm – 75 cm) high, stable, level and free from overhanging items such as limbs, wires etc.
3. All visitors: children, adults, and pets, should be kept at a distance from working area, at least 16.5 ft. (5 m) from the log splitter while it is in operation. Stop the log splitter if people or pets enter the discharge area.
4. Always observe the surface conditions to avoid slipping, falling, and unexpected objects.
5. Avoid Dangerous Environments – Don't use appliances in damp or wet locations. Do not operate the log splitter in the rain or wet conditions.
6. Operation of the log splitter where temperatures are below 41°F (5°C) or above 104°F (40°C), at a high altitude and/or high humidity may result in a malfunction of the machine. Do not use the log splitter in poor environmental conditions.
7. Ensure electrical conditions meet requirements (see Electric Safety).
8. Do not use the machine where gasoline, natural gas or other flammable vapors are present. The electric motor may spark and cause an explosion or fire.

Protective Clothing

1. Thrown objects can cause serious injury to the eyes and exposed body. Always wear safety glasses or eye shields during operation and while performing an adjustment or repair. Always use face or dust mask if operation is dusty.
2. Use of rubber gloves and substantial footwear is recommended when working outdoors. Wear protective hair covering to contain long hair.
3. Always operate wearing adequate protective garments. Dress Properly – **Do not** wear jewelry or other loose clothing, which could become entangled in moving parts. Wear footwear that provides protection for the feet and ensures sure footing.
4. Always use ear protection if the noise level exceeds 85 dB. Observe any noise prevention regulations and laws.
5. Inspect the log splitter for worn, missing or damaged parts and safety labels. See maintenance section for detailed instructions.
6. Use the Right Appliance – Do not use this appliance for any job except that for which it is intended.

© 2019 by Snow Joe®, LLC
All rights reserved. Original instructions.

SAVE THESE INSTRUCTIONS

Wood Condition

1. **Do not** split oversized logs (max. log diameter: 10 inch, max log length: 20.5 inch). **Do not** attempt to split “hard” wood that requires more than 5 seconds to split.
2. Ensure the log is free from items that may be projected or cause damage to the machine (ie.: nails, wire).
3. Ensure the end of the log is cut square and all branches have been cut flush.

OPERATION

Operator Requirements

1. Only one person shall operate the log splitter. All other individuals and animals shall maintain a safe distance during operation (see safety warning in Preparation).
2. Always operate the machine in a standing position and in a location that is not in the path of projected debris. The location of the machine should provide safe footing and balance for the operator.
3. **Do not** operate the machine while under the influence of alcohol, drugs or physically, mentally fatigued. Always be alert and watch what you are doing!
4. Contact with the moving parts can amputate body parts. Do not put any part of your body near moving parts.

Workload Requirements

1. Never exceed the operating capacity of the log splitter.
2. Always split the log in the direction of the grain. Do not place a log across the log splitter.
3. Never split more than one log at a time.
4. **Do not** load a log when the ram is moving.

Log Splitting

1. Remove any keys and adjusting wrenches before turning the machine ON.
2. **Do not** use accessories or attachments that are not recommended in this manual.
3. Place the log on the log retention brackets. Do not hold or secure the log with your hands.
4. **Do not** split wood that takes more than 5 seconds to split. Doing so will apply excessive pressure on the ram cylinder and damage the machine.
5. **Do not** push/force the log onto blade. Always let the blade initiate splitting the log.
6. If the log moves during operation, stop and reset.
7. If a log is jammed do not request assistance of a second person. Ensure the machine power is disconnected and built up pressure released before attempting to release log.
8. Ensure the machine is turned OFF when not in use. If the machine is left unattended then disconnect power to the machine.

MAINTENANCE AND STORAGE

1. Maintain or replace safety and instruction labels. Ensure safety guards are in place.
2. Disconnect the power and ensure built up pressure has been released from the tool before cleaning, repairing, or inspecting the log splitter.
3. For best operation keep the blade sharp, moving parts lubricated and the machine cleaned.
4. Always check for damaged or worn parts, alignment of moving parts, and tightness of bolts and screws before each use.
5. Replace oil as specified in the Maintenance section. Follow all local regulations and laws concerning disposal of waste oil.
6. Qualified mechanics and electricians must carry out repairs.
7. When not in use, always store the machine in a secure location that children cannot access. Store the machine in a dry environment. The machine can be transported or stored in the ambient temperature between 77ºF – 131ºF (25ºC – 55ºC).

Electrical Safety

1. Ground fault circuit interrupter (GFCI) protection should be provided on the circuit(s) or outlet(s) to be used for the log splitter. Receptacles are available having built-in GFCI protection and may be used for this measure of safety.
2. To reduce the risk of electric shock, this appliance has a polarized plug (i.e. one blade is wider than the other). Use this appliance only with a polarized, UL-listed (CSA certified in Canada) extension cord recommended for outdoor use. The appliance plug will fit into a polarized extension cord only one way.

   If the appliance plug does not fit fully into the extension cord, reverse the plug. If the plug still does not fit, obtain a correct polarized extension cord. A polarized extension cord will require the use of a polarized wall outlet. The extension cord plug will fit into the polarized wall outlet only one way. If the plug does not fit fully into the wall outlet, reverse the plug. If the plug still does not fit, contact a qualified electrician to install the proper wall outlet. Do not modify the appliance plug, extension cord receptacle, or extension cord plug in any way.
3. To prevent electric shock, use only with an extension cord suitable for outdoor use, such as SW, SOW, STW, STOW, SJTW, or SJTOW.

   Before use, check that the extension cord is in good condition. When using an extension cord, make sure to use one heavy enough to carry the current your product will draw. For lengths less than 50 feet, a No. 14 AWG extension cord should be used. An undersized cord will cause a drop in line voltage resulting in loss of power and overheating.

⚠ WARNING ⚠

Electric shock may cause SEVERE INJURY or DEATH. Heed these warnings:

- Do not allow any part of the log splitter to make contact with water while it is in operation. If the appliance becomes wet while turned off, wipe dry before starting.
- Use only a UL-, CSA-, or ETL-rated extension cord for outdoor, all-weather use, such as the Snow Joe®+ Sun Joe® SJTW-A 14-gauge 50-foot extension cord with lighted end (Model PJEXT50-B). Visit sunjoe.com to purchase this extension cord online or, to order by phone, call 1-866-SNOWJOE (1-866-766-9563).
- Do not use an extension cord over 100 ft (30 m).
- Do not touch the appliance or its plug with wet hands or while standing in water. Wearing rubber boots offers some protection.

EXTENSION CORD CHART

Extension Cord Length	Up to 50 ft (15 m)	+50 ft - 100 ft (+15 m - 30 m)
Wire Gauge (A.W.G.):	14	12

4. To prevent the appliance cord from disconnecting from the extension cord during operation, make a knot with the two cords as shown in Table 1.

Table 1. Method of Securing Extension Cord

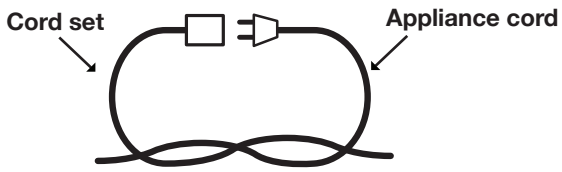

(A) Tie cord as shown

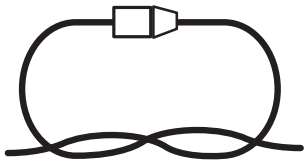

(B) Connect plug and receptacle

5. Do not abuse the cord. Never pull the log splitter by the cord or yank the cord to disconnect it from the receptacle. Keep the cord away from heat, oil, and sharp edges.

Safety Symbols

The following table depicts and describes safety symbols that may appear on this product. Read, understand, and follow all instructions on the machine before attempting to assemble and operate.

Symbols	Descriptions	Symbols	Descriptions
	To reduce the risk of injury, user must read instruction manual.		**SAFETY ALERT –** Indicates a precaution, a warning, or a danger.
	Wear heavy-duty gloves and steel-toed boots when using the machine and handling debris.		Wear eye and hearing protection. For protection against injury, wear ear defenders and safety goggles.
	**WARNING!** Do not expose or operate the unit in rain or wet conditions. Keep dry.		Keep bystanders and children a safe distance away.
	Moving parts can crush and cut hands and fingers. Keep hands clear of the ram plate, wedge, and logs while splitting.		**WARNING!** Always be aware of the movement of the log splitter.
	Disconnect the mains plug if the cord is damaged or entangled.		Keep you hands away from splits and cracks which open in the log. Do not remove jammed logs with you hands.

Know Your Electric Log Splitter

Read the owner's manual and safety instructions carefully before operating the log splitter. Compare the illustration below to the log splitter in order to become familiar with the location of the various controls and adjustments. Save this manual for future reference.

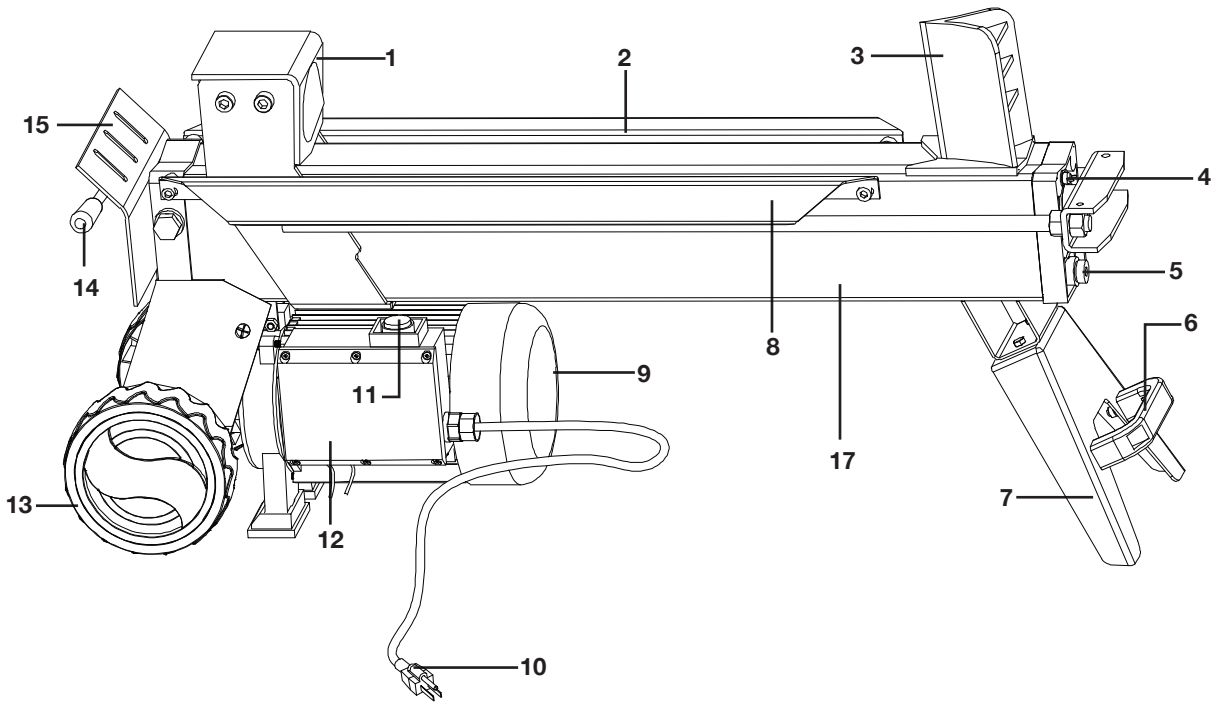

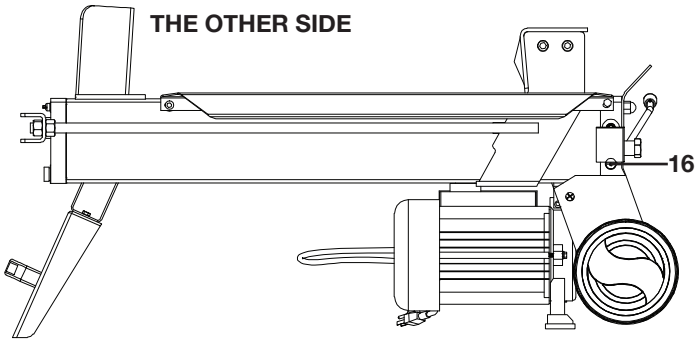

1. Log pusher
2. Log rail
3. Splitting wedge
4. Bleed screw
5. Oil drain bolt
6. Lifting handle
7. Supporting leg
8. Log retaining plates
9. Motor
10. Appliance cord
11. On/Off switch
12. Switch box
13. Rear wheels
14. Hydraulic control lever
15 Control lever guard
16. Max pressure limit screw
17. Beam

Technical Data

Rated Voltage	120 V AC 60 Hz
Splitting Force Max	5 ton
Ram Force/ Continuous Force	5 ton
Material	Steel
Log Length Max	20.5 in. (52 cm)
Log Diameter Max	10 in. (25.4 cm)
Wedge Height	5 in. (12.7 cm)
Beam Height	5.5 in. (14 cm)
Hydraulic Cylinder Size (Length x Diameter)	2.3 in. x 29.7 in. (5.9 cm x 75.5 cm)
Hydraulic Rod Size (Length x Diameter)	1.2 in. x 30.2 in. (3 cm x 76.8 cm)
Hydraulic Capacity	1.1 gal (4.2 l)
Wheel Size	6 in. (15.2 cm)
Weight	92.6 lbs (42 kg)

Unpacking

Carton Contents

- Electric log splitter
- Lifting handle
- Supporting leg
- Bolts, nuts and washers (4 sets)
- Manuals and registration card

1. Carefully remove the log splitter and check to see that all of the above items are supplied.
2. Inspect the product carefully to make sure no breakage or damage occurred during shipping. If you find damaged or missing parts, DO NOT return the unit to the store. Please call the Snow Joe® + Sun Joe® customer service department at 1-866-SNOWJOE (1-866-766-9563).

   NOTE: Do not discard the shipping carton and packaging material until you are ready to use your new electric log splitter. The packaging is made of recyclable materials. Properly dispose of these materials in accordance with local regulations.

IMPORTANT! The equipment and packaging material are not toys. Do not let children play with plastic bags, foils, or small parts. These items can be swallowed and pose a suffocation risk!

Assembly

⚠**WARNING!** Do not connect to the power supply until assembly is complete. Failure to comply could result in accidental starting and serious personal injury.

⚠**WARNING!** The product must be fully assembled before operation. Do not use a product that is only partially assembled or assembled with damaged parts.

NOTE: Before using the log splitter, follow these instructions to assemble the lifting handle and the supporting leg.

1. Place the lifting handle on the supporting leg, fix them together with the provided bolts, nuts and washers. Tighten securely (Fig. 1).

Fig. 1

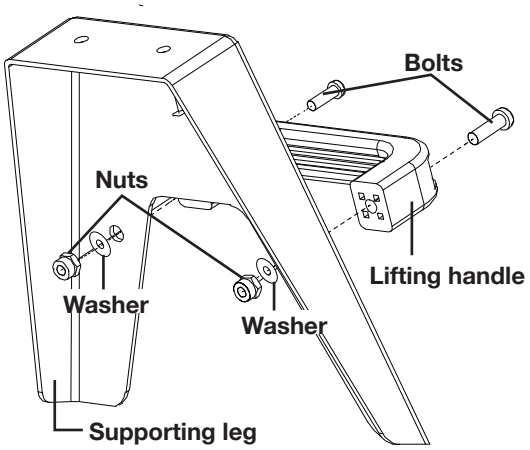

2. Attach the leg with handle assembly on the bottom of the log splitter, secure with the other 2 sets of bolts, nuts and washers. Tighten securely (Fig. 2).

Fig. 2

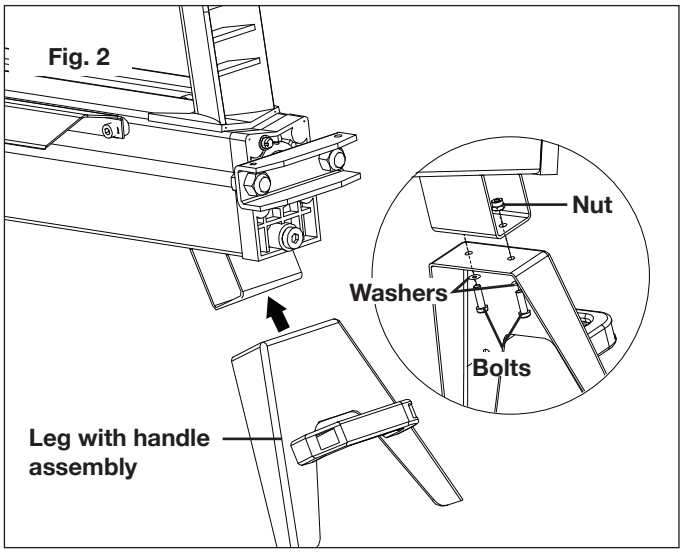

Operation

⚠**WARNING!** Before using the log splitter, review the instructions below and all safety information. Failure to follow these instructions may result in property damage or injury to the operator or bystanders.

⚠**WARNING!** Before the initial operation, the bleed screw should be adjusted to allow air to go in and out of the oil tank. (loosen three to four turns). Airflow should be detectable during operation. To avoid leaking oil close the bleed screw when moving the machine.

Important! Failure to open the bleed screw during operation will result in permanent damage to the log splitter.

⚠**WARNING!** Do not adjust the max. pressure limiting screw. This was set at the factory so the log splitter works under the maximum pressure limit of 5 tons. Tampering with the screw will result in hydraulic pump failure. Only a professional mechanic shall adjust the max. pressure limiting screw.

Splitting Operation

Follow these instructions to operate the log splitter:

1. Ensure all logs meet the proper size requirements [(max log diameter: 10 in. (25.4 cm); max log length: 20.5 in. (52 cm)].

   IMPORTANT! Logs vary in hardness and structure. Small logs with knots or harder wood may be more difficult to split. Larger logs with less hardness may not be difficult to split. Do not force the log splitter if the log fails to split on the first attempt.

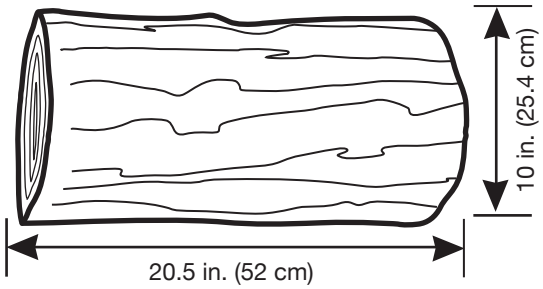

2. When loading or positioning a log, always handle the bark side; never handle the ends. Never place your hands or body parts between the log and the splitter.
3. Make sure all moving parts is completely stop. Never load or unload logs while the log pusher is moving.
4. Check that bleed Screw is open.
5. Load the log lengthwise into the unit between the wedge and the log pusher. Be sure that the split will be along the grain. Check to make sure the log is fixed stably.

⚠**WARNING!** Always set logs firmly on the log retaining plates and the log rail. Make sure logs will not twist, rock or slip while being split. Do not force the blade by splitting the log on the upper part. This will break the blade or damage the machine (Fig. 3).

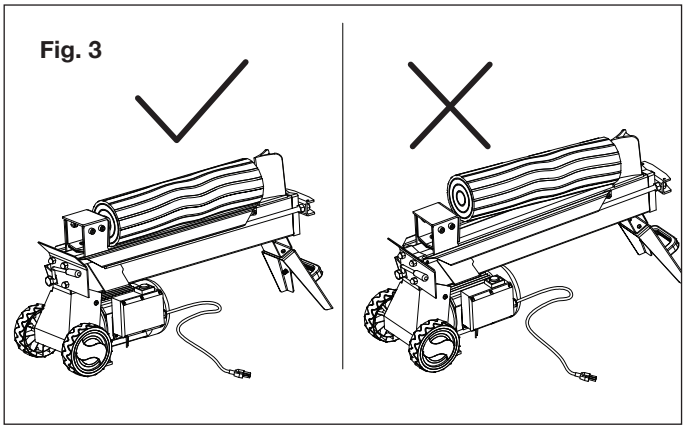

⚠**WARNING!** Never load or unload logs while the log pusher is moving.

6. Plug the appliance cord into an appropriate power outlet.
7. Engage the log pusher by using your left hand to push the hydraulic control lever and your right hand to push the On/Off switch (Fig. 4).

   NOTE: This log splitter is equipped with ZHB control system, which requires both the On/Off switch and the hydraulic control lever to be engaged simultaneously to start the machine.

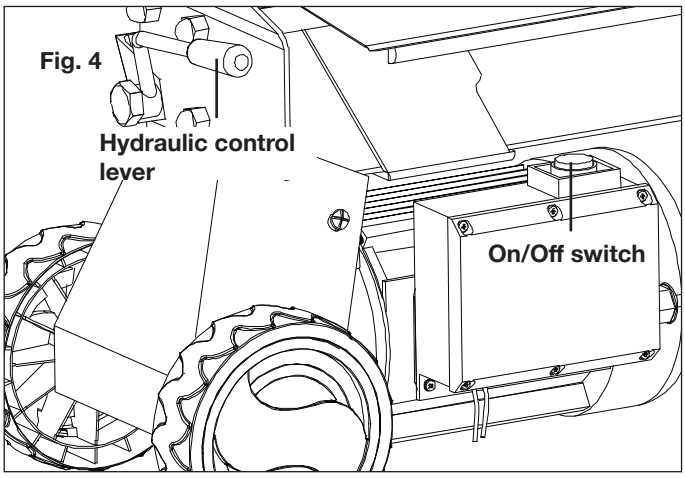

8. The log pusher will move forward and the log will be split by the splitting wedge.

⚠**WARNING!** If the log cannot be split within 5 seconds, do not engage the log pusher any more, otherwise the log splitter will be damaged. For extremely hard logs, rotate it by 90° to see if it can be split in a different direction. If the log still cannot be split, its hardness exceeds the capacity of the machine and thus that log should be discarded to protect the log splitter.

⚠**WARNING!** Break log in the direction of its growing grain. Do not place log across the log splitter for splitting. It may be dangerous and may seriously damage the machine.

⚠**WARNING!** Do not attempt to split 2 log pieces at the same time. A piece may fly up and cause personal injury.

⚠**WARNING!** Accidents occur when there is more than one person involved in loading and operating the log splitter; only one person should operate the splitter. If a second person is assisting in loading the splitter, NEVER allow an assistant to hold the log in place while the operator is using the unit.

9. Release both the hydraulic control lever and the On/Off switch, the log pusher will move to the original position. Wait until the wood pusher completely stops, and remove the split log.

Removing A Jammed Log

If the log gets stuck on the wedge base, or the wedge becomes embedded in the log and will not completely split or separate from the log, follow the directions below to remove the log.

⚠ **WARNING!** Do not attempt to remove the jammed log with your hands or knock it off. It may cause serious injury or damage to the machine.

1. Release both the hydraulic control lever and the On/Off switch.
2. After the log pusher moves back and completely stops at its starting position, insert a wedge wood under the jammed log (Fig. 5).

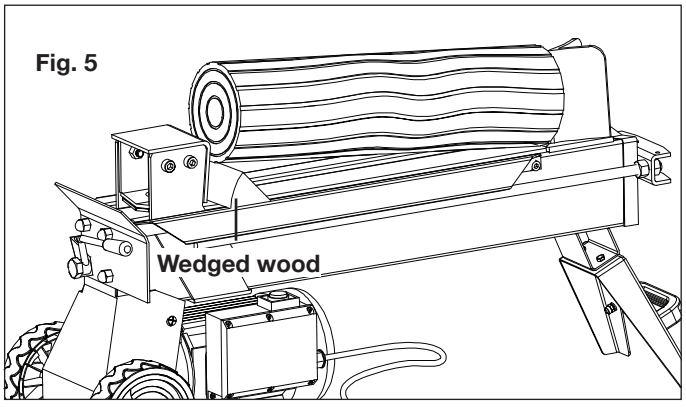

3. Start the log splitter to push the wedge wood to go completely under the jammed one.
4. Repeat above instructions 2 - 3 with a sharper sloped wooden wedge as needed until the log is free.

⚠**WARNING!** Do not try to knock the jammed log off. It will damage the machine or may launch the log and cause an accident or injury (Fig. 6).

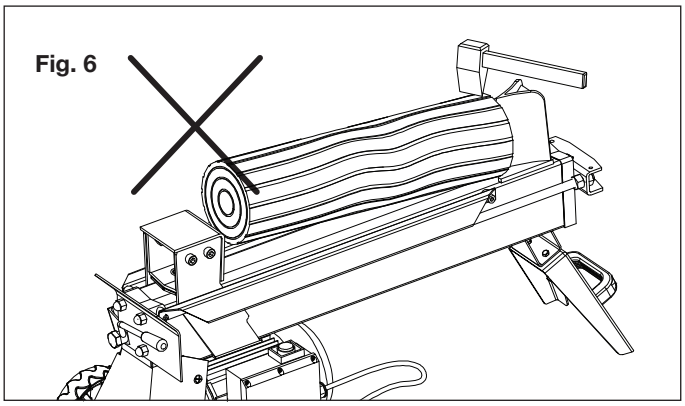

Maintenance

⚠**WARNING!** Always disconnect the power and ensure built up pressure has been released from the tool before cleaning, repairing, or inspecting the log splitter.

General

- Periodically apply a light coat of rust resistant oil, such as 3-in-1 oil or WD-40, to the springs to keep them in proper working order.
- Periodically check all fasteners for tightness.
- Annually clean and lightly lubricate parts.
- Use a glossy enamel spray paint to touch up scratched or worn painted metal surfaces.
- Never exceed the load capacity rating of 5 tons; it will damage the log splitter and void the manufacturer's warranty.
- Periodically sharpen the wedge. Use a fine tooth file, take off burrs and smooth rough sections of the cutting edge.

IMPORTANT! If a part needs replacement, only use parts that are specifically recommended by the manufacturer. Replacement parts that do not meet these specifications may result in a safety hazard, may compromise the tool's performance, and will void the manufacturer's warranty.

Replacing the Hydraulic Oil

After every 150 hours of use, the hydraulic oil needs to be replaced. The following hydraulic oils or equivalent are recommend for the log splitter’s hydraulic transmission system.

- SHELL Tellus 22
- MOBIL DTE 11
- ARAL Vitam GF 22
- BP Energol HLP-HM 22

To replace the hydraulic oil, follow the instructions below.

1. Turn off and unplug the log splitter. Make sure all moving parts have come to a complete stop.
2. Unscrew to remove the oil drain bolt with dipstick (Fig. 7).

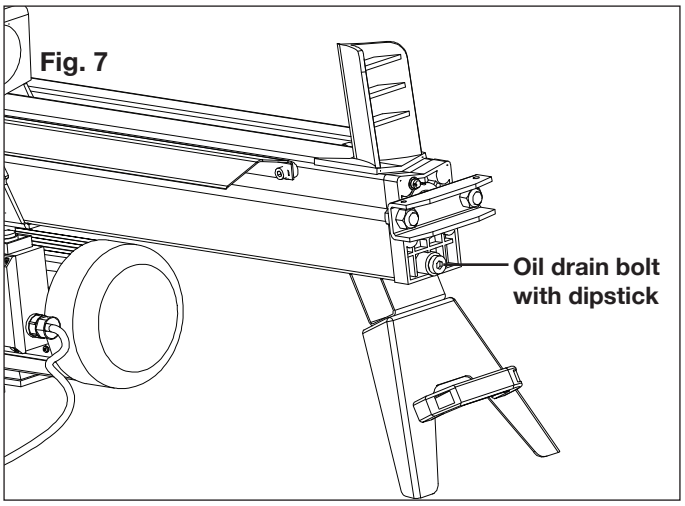

3. Turn the log splitter and let it stand on the supporting leg to drain the hydraulic oil off (Fig. 8).

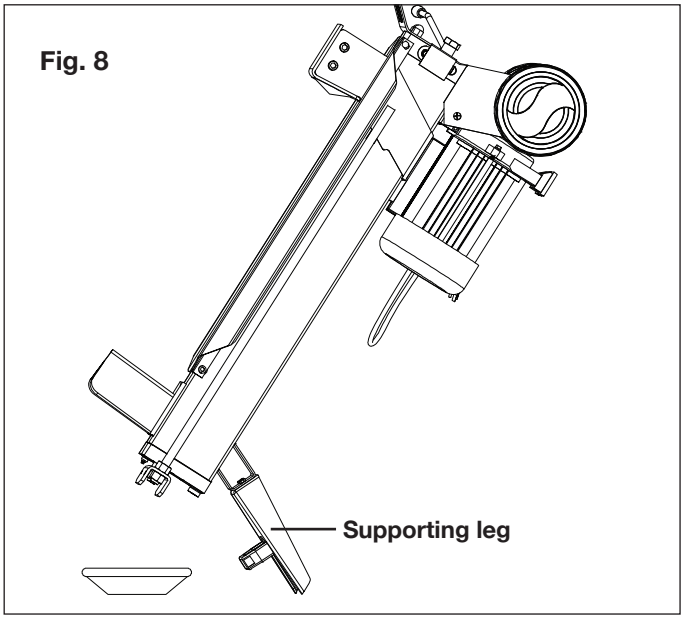

4. Turn the log splitter and let it stand on the rear wheels, and refill the hydraulic oil into the hole behind the oil drain bolt with dipstick (Fig. 9).

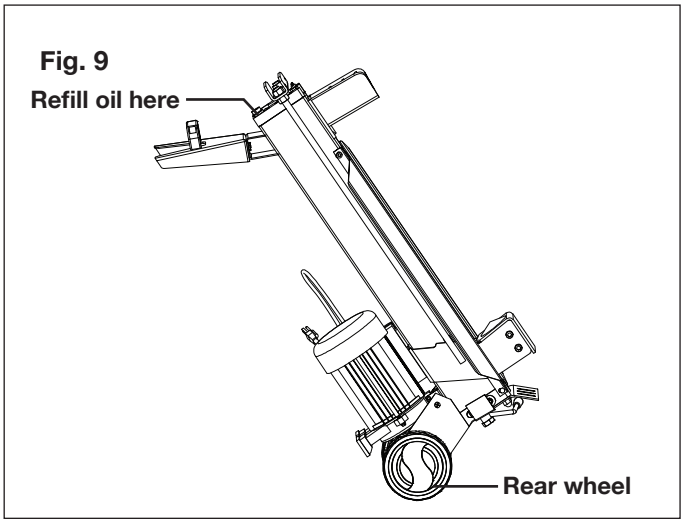

5. Clean the oil drain bolt before thread them back. Make sure it is tightened to avoid leakage before place the log splitter horizontally.

Storage

- Before storing, make sure the log splitter is clean and dry. Such upkeep is necessary to ensure years of trouble-free performance.
- Lightly lubricate all metal surfaces before storing.
- Store the machine in a secure location that children cannot access. Store the machine in a dry environment. The machine can be transported or stored in the ambient temperature between 77°F – 131°F (25°C – 55°C).
- Examine the log splitter thoroughly for worn, loose, or damaged parts. Should you need to repair or replace a part, contact an authorized Snow Joe® + Sun Joe® dealer or call the Snow Joe® + Sun Joe® customer service center at 1-866-SNOWJOE (1-866-766-9563) for assistance.

Service + Support

If your Sun Joe® LJ602E electric log splitter requires service or maintenance, please call 1-866-SNOWJOE (1-866-766-9563) for assistance.

Model + Serial Numbers

When contacting the company or reordering parts, you will need to provide the model and serial numbers of your product. These are found on the decal affixed to the housing or handle of your log splitter. Copy these numbers into the space provided below.

Record the following numbers from the housing or handle of your new product:

Model #:

L | J | 6 | 0 | 2 | E

Serial #:

Troubleshooting

Problem	Possible Causes	Recommended Remedy
Motor does not run	• Overload protection device disengaged to protect the log splitter from being damaged	• Contact a qualified electrician for opening the switch box to engage the overload protection device inside.
The machine fails to split logs	• Log is improperly positioned. • The sizes or hardness of the log exceeds the capacity of the machine • Wedge cutting edge is blunt • Oil leaks • Unauthorized adjustment was made on Max. Pressure Limiting Screw. Lower max pressure rating was set.	• Reload the log • Reduce the log size • Locate leak(s) and call the Snow Joe® + Sun Joe® customer service department at 1-866-SNOWJOE (1-866-766-9563). • Call the Snow Joe® + Sun Joe® customer service department at 1-866-SNOWJOE (1-866-766-9563).
The log pusher moves jerkily, generating unusual noise or vibrating a lot	• Lack of hydraulic oil and excessive air in the hydraulic system.	• Check oil level. Refill the hydraulic oil if needed.
Oil leaks around the ram or from other points.	• Air sealed in hydraulic system while operating. • Bleed screw is not tightened before moving the log splitter. • Oil drain bolt with dipstick is not tightened. • Hydraulic control valve assembly and/or seal(s) is worn.	• Loosen bleed screw by 3 ~ 4 rotations before operating the log splitter. • Tighten the bleed screw up before moving the log splitter. • Tighten the oil drain bolt with dipstick. • Call the Snow Joe® + Sun Joe® customer service department at 1-866-SNOWJOE (1-866-766-9563).

Only a company specialist may be able to correct faults that cannot be rectified with the aid of this table. Please call the Snow Joe® + Sun Joe® customer service center at 1-866-SNOWJOE (1-866-766-9563).

Optional Accessories

⚠**WARNING!** ALWAYS use only authorized Snow Joe® + Sun Joe® replacement parts and accessories. NEVER use replacement parts or accessories that are not intended for use with this tool. Contact Snow Joe® + Sun Joe® if you are unsure whether it is safe to use a particular replacement part or accessory with your tool. The use of any other attachment or accessory can be dangerous and could cause injury or mechanical damage.

Accessories	Item	Model
① 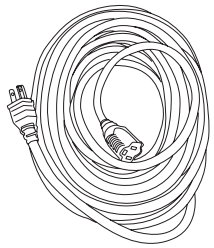	Snow Joe® + Sun Joe® SJTW-A 14-gauge 50-foot extension cord with lighted end	PJEXT50-B

NOTE: Accessories are subject to change without any obligation on the part of Snow Joe® + Sun Joe® to provide notice of such changes. Accessories can be ordered online at sunjoe.com or via phone by contacting the Snow Joe® + Sun Joe® customer service center at 1-866-SNOWJOE (1-866-766-9563).

NOTES

NOTES

NOTES



SNOW JOE® + SUN JOE® CUSTOMER PROMISE

ABOVE ALL ELSE, Snow Joe® + Sun Joe® are dedicated to you, our customer. We strive to make your experience as pleasant as possible. Unfortunately, there are times when a product does not work or breaks under normal operating conditions. We think it's important that you know what you can expect from us. That's why we created the Snow Joe® + Sun Joe® promise.

OUR PROMISE: Snow Joe® + Sun Joe® warrant new products for two years from the date of purchase. If your product does not work, or there's an issue with a specific part, we will fix this by either sending you a free replacement part or by sending you a new or comparable product at no charge. How cool is that! Before you know it, you'll be back in action cutting, sawing, mowing, washing and…?

PRODUCT REGISTRATION:

Snow Joe®, LLC ("Snow Joe® + Sun Joe®") strongly encourages you to register your purchase. You can register online at **snowjoe.com/ProductRegistration**, or by printing and mailing in a registration card available online from our website, or calling our Customer Service Department at **1-866-SNOWJOE (1-866-766-9563)**, or by e-mailing us at **help@snowjoe.com**. Failure to register your product purchase will not diminish your warranty rights. However, registering your purchase will allow Snow Joe® + Sun Joe® to better serve you with any of your customer service needs.

WHO CAN SEEK WARRANTY COVERAGE?

This Warranty is extended by Snow Joe® + Sun Joe® to the owner of this Machine (a "Machine" consists of a product powered by a motor) for residential and personal household use only. This Warranty does not apply to products used for commercial, rental or re-sale purposes. Should ownership of this machine change during the 2-year period, please update the Machine's owner information at **snowjoe.com/ProductRegistration**.

WHAT IS COVERED?

Snow Joe® + Sun Joe® warrants to the owner that if this Machine fails within 2 years from the date of purchase due to a defect in material or workmanship or as a result of normal wear and tear from ordinary household use, Snow Joe® + Sun Joe® will send a replacement part or product, as needed, free of charge and with free shipping to the original purchaser.

If, in Snow Joe® + Sun Joe®'s sole discretion, the failed Machine cannot be repaired with a part, Snow Joe® + Sun Joe® will elect to either (A) send a new Machine at no charge and with free shipping or (B) refund the full purchase price to the owner.

WHAT IS NOT COVERED?

This Warranty does not apply to the Machines that have been used commercially or in non-household applications. This Warranty does not cover cosmetic changes that do not affect performance. This Warranty is only valid if the Machine is used and maintained in accordance with the instructions, warnings and safeguards contained in the owner's manual. Snow Joe® + Sun Joe® will not be responsible for the cost of any unauthorized warranty repairs. This warranty does not cover any cost or expense incurred by the purchaser in providing substitute equipment or service during reasonable periods of malfunction or non-use of this product while waiting for a replacement part or unit under this warranty.

Wearing parts like belts, augers, chains and tines are not covered under this warranty, and can be purchased at **snowjoe.com** or by calling **1-866-SNOWJOE (1-866-766-9563)**. Batteries are covered in full for 90-days from the date of purchase.

Repair, replacement or refund of the purchase price are the exclusive remedies of purchaser and the sole liability of Snow Joe® + Sun Joe® under this warranty. No employee or representative of Snow Joe® + Sun Joe® is authorized to make any additional warranty or any modification to this warranty which may be binding upon Snow Joe® + Sun Joe®. Accordingly, purchaser should not rely upon any additional statements made by any employee or representative of Snow Joe® + Sun Joe®. In no event, whether based on contract, indemnity, warranty, tort (including negligence), strict liability or otherwise, shall Snow Joe® + Sun Joe® be liable for any special, indirect, incidental, or consequential damages, including, without limitation, loss of profit or revenue.

Some states do not allow limits on warranties. In such states, the above limitations may not apply to you.

Outside the USA, other warranties may apply.



sunjoe.com