SUNJOE®

OPERATOR'S MANUAL

A Division of Snow Joe®, LLC

ELECTRIC PRESSURE WASHER

1350 PSI MAX* | 1.45 GPM MAX* | 10 AMP

Model SPX201E

Form No. SJ-SPX201E-880E-MR2

IMPORTANT!

Safety Instructions

All Operators Must Read These Instructions Before Use

⚠**WARNING!** This indicates a hazardous situation, which, if not avoided, could result in death or serious injury.

⚠**CAUTION!** This indicates a hazardous situation, which, if not avoided, could result in minor or moderate injury.

⚠**DANGER!** This indicates a hazardous situation, which, if not followed, will result in death or serious injury.

General Safety

⚠**WARNING!** This appliance is not intended for use by children or by unassisted, unsupervised persons whose physical, sensory, or mental capabilities prevent them from using it safely. Children should be supervised to ensure that they do not play with the appliance.

Before starting up your machine, please check it carefully for any defects. If you find any, do not start up your machine. Contact your authorized Snow Joe® + Sun Joe® dealer or call the Snow Joe® + Sun Joe® customer service center at 1-866-SNOWJOE (1-866-766-9563).

⚠**WARNING!** When using the pressure washer, basic safety precautions should always be followed to reduce the risk of fire, electric shock, and personal injury. These include:

- **Know your product –** Know how to stop the machine and bleed pressure quickly. Thoroughly familiarize yourself with the controls.
- **Keep bystanders away –** All visitors and pets should be kept a safe distance away from the work area.
- **Use the right product –** Do not use this machine for any job except that for which it is intended.
- **Dress properly –** Do not wear loose clothing or jewelry. They can get caught in moving parts. Protective rubber gloves and non-slip footwear are recommended when working outdoors.
- ⚠**CAUTION! –** Exercise caution to avoid slipping or falling. Wear protective footwear that will protect your feet and improve your footing on slippery surfaces.
- **Stay alert –** Watch what you are doing. Use common sense. Do not operate the pressure washer when you are tired, or under the influence of alcohol or drugs.
- **Do not overreach –** Keep proper footing and balance at all times.
- **Avoid unintentional starting –** Do not carry a plugged-in machine with your finger on the trigger. Make sure the switch is off before plugging in the machine.
- **Do not abuse the cord –** Never carry the machine by the cord or yank the cord to disconnect it from the receptacle. Keep the cord away from heat, oil, and sharp edges.
- **Use safety glasses –** Also use safety footwear, snug-fitting clothing, protective gloves, and hearing and head protection.
- **Check the water temperature –** This pressure washer is not meant to pump hot water. **NEVER** connect it to a hot water supply as it will significantly reduce the life of the pump.
- **Store indoors – NEVER** store the pressure washer outdoors or where it could freeze. The pump could be seriously damaged.
- **Ground Fault Circuit Interrupter (GFCI) –** GFCI protection should be provided on the circuits or outlets to be used for this pressure washer. Receptacles are available having built-in GFCI protection and may be used for this measure of safety.
- **Inspect electrical cables –** The insulation of the power cord should be perfectly intact. If the power cord is damaged or shows any signs of wear or tear, do not use the pressure washer. Contact your authorized Snow Joe® + Sun Joe® dealer or call the Snow Joe® + Sun Joe® customer service center at 1-866-SNOWJOE (1-866-766-9563).

⚠**WARNING!** Do not use this appliance without reading this instruction manual.

⚠**WARNING!** This pressure washer's spray wand is compatible with the SPX1DT detergent bottle attachment (sold separately; visit sunjoe.com to purchase). When using this attachment, be sure to use cleaning agents that are specifically recommended by the manufacturer. The use of other cleaning agents or chemicals may adversely affect the safety of the appliance.

⚠**WARNING!** Do not use the appliance within range of other people unless they are wearing protective clothing.

⚠**WARNING!** High-pressure jets can be dangerous if subject to misuse. The jet must not be directed at persons, pets, live electrical equipment, or the appliance itself.

© 2019 by Snow Joe®, LLC
All rights reserved. Original instructions.

SAVE THESE INSTRUCTIONS

- Do not direct the jet at yourself or others in order to clean clothes or footwear.
- **Risk of explosion –** Do not spray flammable liquids.
- **Disconnect the tool –** Disconnect from the electrical power supply before performing any maintenance task.
- **Keep children away –** This high-pressure electric power washer must not be used by children or untrained personnel.
- To ensure appliance safety, use only original replacement parts from the manufacturer or those approved by the manufacturer.

⚠**WARNING!** Water that has flowed through backflow preventers is considered to be non-potable.

⚠**WARNING!** During cleaning, maintenance, or when replacing parts, disconnect the machine from its power source by removing the plug from the socket outlet.

⚠**WARNING!** High-pressure hoses, fittings, and couplings are important for the safe operation of the appliance. Use only hoses, fittings, and couplings recommended by the manufacturer.

- **Check for damaged parts –** Do not use the appliance if the supply cord or other important parts of the appliance are damaged (e.g. safety devices, high-pressure hoses, trigger gun).

⚠**WARNING!** If an extension cord is used, the plug and socket must be of watertight construction.

NOTE: It is not recommended to use an extension cord with this pressure washer.

⚠**WARNING!** Inadequate extension cords can be dangerous.

- This high-pressure electric power washer must not be used at temperatures below 32ºF (0°C).

⚠**WARNING!** Power cords on drums should always be completely unwound to prevent the cord from overheating.

- Power cord connections should be kept dry and off the ground.
- If the power cord is damaged, do not use the appliance. Contact your authorized Snow Joe® + Sun Joe® dealer or call the Snow Joe® + Sun Joe® customer service center at 1-866-SNOWJOE (1-866-766-9563).
- Keep the machine on a stable, flat surface during operation, handling, transportation, and storage. Sudden overturn of the machine can cause bodily injury.
- In the event of an accident or breakdown, switch off the machine immediately. (If contact with detergent occurs, rinse with an abundance of clean water.)

Electrical Safety

ATTENTION: If there are problems with the electrical MAINS, short voltage drops may appear when starting the equipment. This can, in turn, influence other equipment (e.g. cause a lamp to blink). If the MAINS-IMPEDANCE Zmax < 0.335 OHM, such disturbances are not expected. (If you require assistance, contact your local supply authority for further information.)

⚠**WARNING! Electrical Shock Hazard –** Before starting up your machine, please check it carefully for any defects. If you find any, do not start up your machine. Contact your authorized Snow Joe® + Sun Joe® dealer or call the Snow Joe® + Sun Joe® customer service center at 1-866-SNOWJOE (1-866-766-9563).

The following should be observed when connecting the high-pressure electric power washer to the electric supply:

- The electric supply connection should be performed by a qualified person.
- The electric supply to this appliance should include either a residual current device that will interrupt the supply if the leakage current to the earth exceeds 30 mA for 30 ms or a device that will interrupt the earth circuit (GFCI).

IMPORTANT: Only use water without any impurities. If there is a risk of running sand into the inlet water (i.e. from your own well), an additional filter should be installed.

Safety devices

The unloader valve can reduce pressure if it exceeds preset values. The spray gun features a locking device. When the lock is activated, the spray gun cannot be operated.

1. **Thermal sensor –** A thermal sensor protects the motor against overloading. The machine will restart after a few minutes when the thermal sensor has cooled.
2. **Double insulation –** In a double-insulated appliance, two systems of insulation are provided instead of grounding. No grounding means is provided on a double-insulated appliance, nor should a means for grounding be added to the appliance. Servicing a double-insulated appliance requires extreme care and knowledge of the system, and should be performed only by qualified service personnel at an authorized Snow Joe® + Sun Joe® dealer. Replacement parts for a double-insulated appliance must be identical to the parts they replace. A double-insulated appliance is marked with the words “Double Insulation” or “Double Insulated.” The symbol ⧈ (square within a square) may also be marked on the appliance.
3. **Ground fault circuit interrupter (GFCI) protection –** A GFCI should be provided on the circuit(s) or outlet(s) to be used for this pressure washer. Receptacles are available having built-in GFCI protection and may be used for this measure of safety.

4. It is not recommended to use an extension cord with this pressure washer. The unit comes standard with a 35 ft GFCI power cable. Using an extension cord may cause a drop in line voltage resulting in loss of power and overheating.
5. To reduce the risk of electric shock, this appliance has a polarized plug (i.e. one blade is wider than the other). The appliance plug will fit into a polarized outlet only one way.

   If the appliance plug does not fit fully into the outlet, reverse the plug. If the plug still does not fit, make sure that you are using the correct polarized wall outlet. If the plug still does not fit, contact a qualified electrician to install the proper wall outlet. Do not modify the appliance plug, power cord receptacle, or power cord plug in any way.

⚠ WARNING ⚠

Electric shock may cause SEVERE INJURY or DEATH. Heed these warnings:

- Do not allow any part of the electric pressure washer to make contact with water while it is in operation. If the appliance becomes wet while turned off, wipe dry before starting.
- Do not use an extension cord over 25 ft. The pressure washer comes equipped with a 35 ft power cable. Combined cord length must not exceed 60 ft. Any extension cord must be 16-gauge (or heavier) to safely power the pressure washer.
- Do not touch the appliance or its plug with wet hands or while standing in water. Wearing rubber boots offers some protection.

EXTENSION CORD CHART

Cord Length:	25 ft (7.6 m)
Min. Wire Gauge (A.W.G.):	16

6. To prevent the appliance cord from disconnecting from the extension cord during operation, make a knot with the two cords as shown in Table 1.

Table 1. Method of Securing Extension Cord

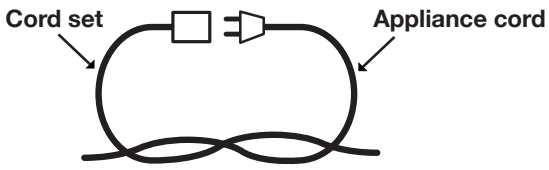

(A) Tie cord as shown

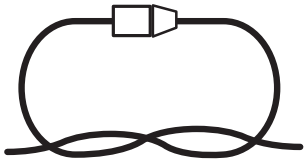

(B) Connect plug and receptacle

7. Do not abuse the cord. Never pull the pressure washer by the cord or yank the cord to disconnect it from the receptacle. Keep the cord away from heat, oil, and sharp edges.

Risk of electrocution

- Inspect cord before using.
- Do not use if cord is damaged.
- Keep all connections dry and off the ground.
- Do not touch plug with wet hands.
- Keep cord away from heat and sharp edges.
- Do not spray electrical apparatus and wiring.

Risk of explosion

- Do not spray flammable liquids.
- Do not use acids, bases, solvents, or any flammable material in this product. These substances can cause physical injuries to the operator and irreversible damage to the machine.

Additional safety instructions

- High-pressure: keep clear of nozzle.
- Injection hazard: equipment can cause serious injury if the spray penetrates the skin.
- Do not point the gun at anyone or at any part of the body.
- In case of skin penetration, seek medical aid immediately.
- Before servicing, cleaning, or removing any parts, shut off the power and relieve pressure.
- This machine is not suitable for connection to the potable water mains.

Product Description

Purpose

- This high-pressure electric power washer is intended for residential use only. It is designed for light-to-medium duty cleaning jobs on boats, motorcycles, RVs, ATVs, trailers, decks, barbecues, siding, patio furniture, and more.

Areas of application

- Never use the machine in potentially explosive areas under any circumstances!
- The operating temperature must be between 32°F (0°C) and 104°F (40°C).
- The machine consists of an assembly with a pump, which is encased in a shock-absorbing housing. To provide the operator with an optimal working position, the machine is equipped with a spray wand and a non-slip handle grip, whose shape and configuration comply with applicable regulations.
- Do not cover or modify the spray wand or the spray nozzle in any way.
- The high-pressure electric power washer is designed to be used with cold or lukewarm water; higher temperatures can damage the pump.
- Do not use water that is dirty, gritty, or contains any chemical products, as such impurities could impair operation and shorten the life of the machine.

Safety Symbols

The following table depicts and describes safety symbols that may appear on this product. Read, understand, and follow all instructions on the machine before attempting to assemble and operate.

Symbols	Descriptions	Symbols	Descriptions
	**READ THE OPERATOR'S MANUAL(S) –** Read, understand, and follow all instructions in the user manual(s) before attempting to assemble and operate.		**WARNING!** Electrical shock hazard.
	**SAFETY ALERT –** Indicates a precaution, a warning, or a danger.		**WARNING!** Do not expose the unit to rain or wet conditions. Keep dry.
	**WEAR EYE AND HEARING PROTECTION –** For protection against injury, wear ear defenders and safety goggles.		To reduce the risk of injury, user must keep all bystanders at least 49 ft (15 m) away.
	Wear safety gloves during use to protect hands.		Wear non-slip footwear that will protect your feet and improve your footing on slippery surfaces.
	Store indoors. Never store the pressure washer outdoors. If the pump freezes, permanent damage may result.		Machine not suitable for connection to the potable water mains.
	Always keep the power cable away from heat sources, oils, or sharp edges. Immediately remove plug from the mains if the cable is damaged, frayed, or entangled.		**WARNING!** Turn the machine OFF and disconnect it from the power supply before inspecting, cleaning, changing accessories, or conducting any other maintenance task.
	Sound power level is 88 dB.		**Double Insulation –** When servicing, use only identical replacement parts.

Know Your Electric Pressure Washer

Read the owner's manual and safety rules carefully before operating the pressure washer. Compare the illustration below to the pressure washer in order to familiarize yourself with the location of the various controls and adjustments. Save this manual for future reference.

1. Safety lock
2. Trigger
3. High-pressure hose connection
4. Trigger gun
5. Spray wand assembly
6. Adjustable spray wand nozzle
7. On/Off switch
8. Garden hose adapter/connection
9. Water inlet
10. Transport handle
11. Water outlet/high-pressure hose connection
12. Cord holder
13. Power cord with GFCI
14. High-pressure hose
15. Needle clean-out tool

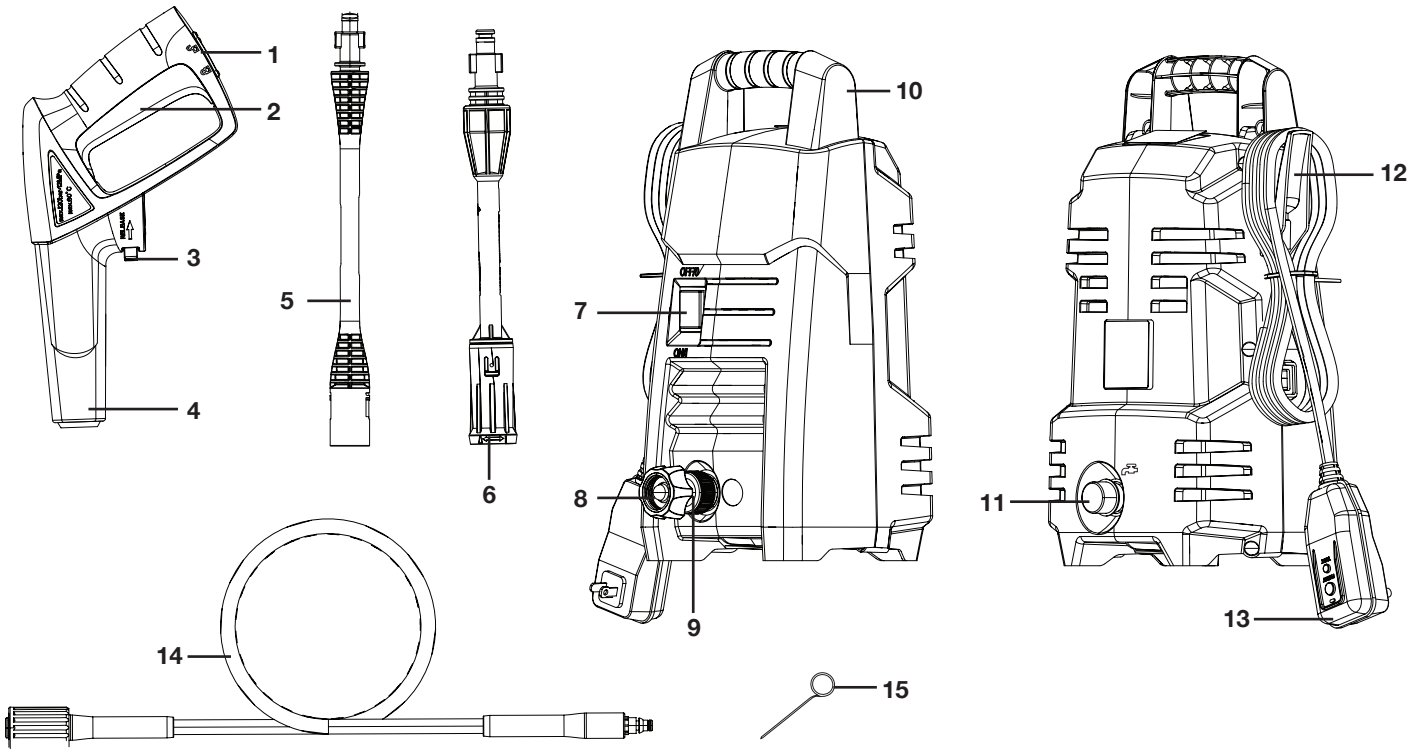

Technical Data

Rated Voltage	120 V ~ 60 Hz
Motor	10 amp
Max Water Inlet Temperature	104ºF/40ºC
Max Water Inlet Pressure	0.7 MPa
Max Flow*	1.45 GPM
Rated Flow	1.32 GPM
Rated Pressure	870 PSI
Max Pressure*	1350 PSI
Hose Length	20 ft (6 m)
Power Cord Length	35 ft (10.7 m)
Weight	9.2 lbs (4.2 kg)

** Max rating per CSA test standards. Maximum internal pressure is 1350 PSI and flow is 1.45 GPM. Under typical load, working pressure is 870 PSI and flow is 1.32 GPM.*

Unpacking

Carton Contents

- Electric pressure washer
- Handle
- Trigger gun
- Spray wand assembly
- Adjustable spray wand nozzle
- Two (2) Phillips head screws (for handle)
- Cord holder
- Needle clean-out tool (included with manual packet)
- High-pressure hose
- Garden hose adapter (female coupler)
- Manuals with registration card

1. Carefully remove the pressure washer and check to see that all of the above items are supplied.
2. Inspect the product carefully to make sure no breakage or damage occurred during shipping. If you find damaged or missing parts, DO NOT return the unit to the store. Please call the Snow Joe® + Sun Joe® customer service center at 1-866-SNOWJOE (1-866-766-9563).

   NOTE: Do not discard the shipping carton and packaging material until you are ready to use your new electric pressure washer. The packaging is made of recyclable materials. Properly dispose of these materials in accordance with local regulations.

IMPORTANT! The equipment and packaging material are not toys. Do not let children play with plastic bags, foils, or small parts. These items can be swallowed and pose a suffocation risk!

⚠**WARNING!** Do not connect to power supply until assembly is complete. Failure to comply could result in accidental starting and possible serious personal injury.

Assembly

Tools required: Phillips head screwdriver

1. Following the alignment grooves at the top of the machine body, slide the handle into position from the front to the back, so that the solid side of the handle faces the front of the washer. Secure the handle using a Phillips head screwdriver and the two (2) supplied Phillips head screws (Fig. 1).

Fig. 1

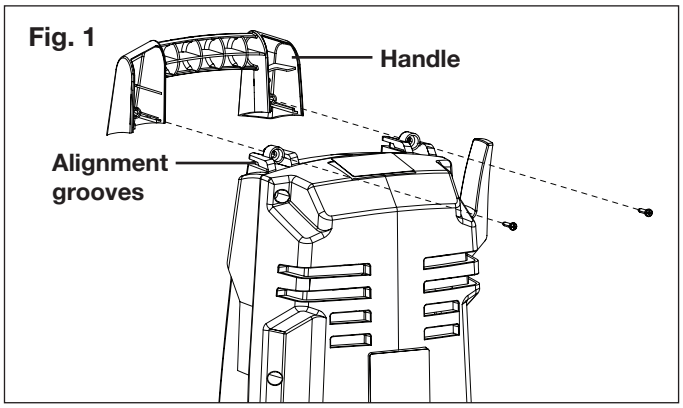

2. Slide the cord holder into position (Fig. 2).

Fig. 2

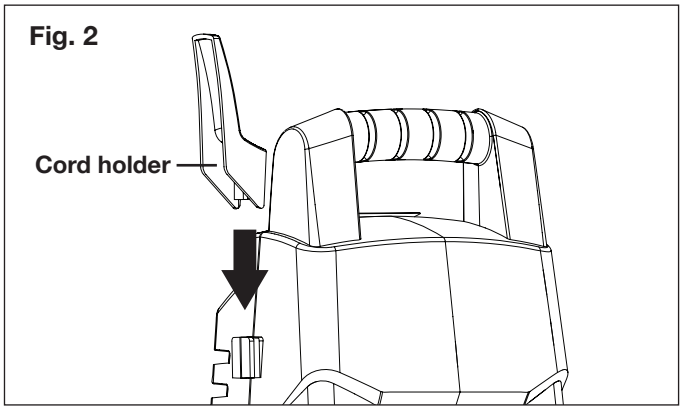

3. Fit the two pieces of the spray wand assembly together and rotate it until the two parts are completely locked (Fig. 3).

Fig. 3

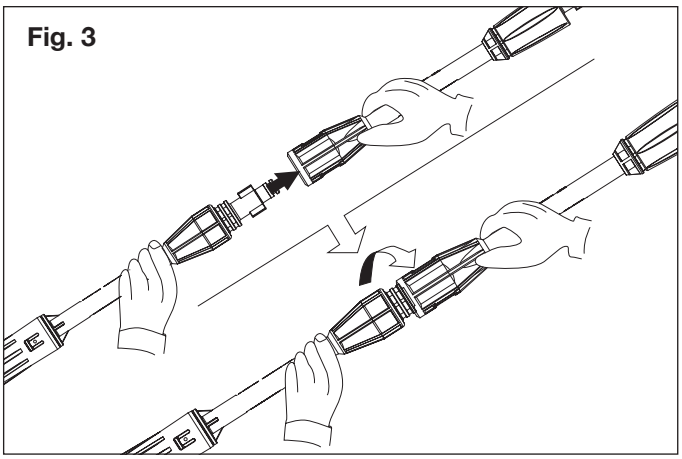

4. Fit the spray wand assembly into the gun and turn the rotatable end-piece of the wand until the two parts are completely locked (Fig. 4).

Fig. 4

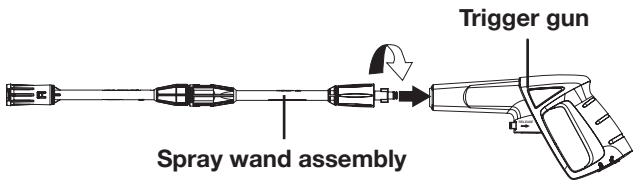

5. Connect the quick-connect end of the high-pressure hose to the trigger gun (Fig. 5). You will hear a *click* when it snaps into place. To release the high-pressure hose from the trigger gun, push the release button on the trigger gun.

Fig. 5

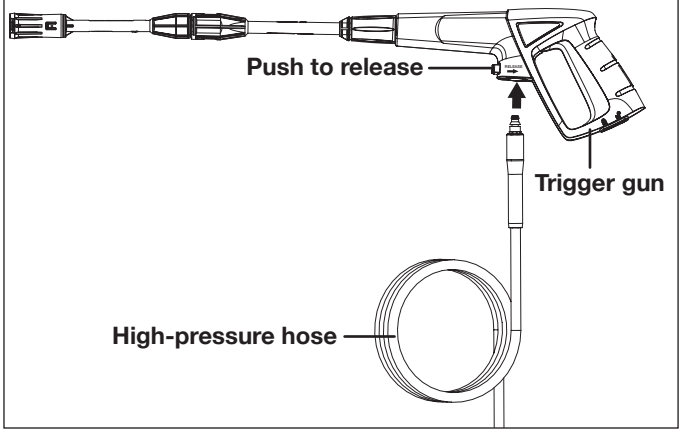

6. Connect the other end of the high-pressure hose to the water outlet on the pressure washer (Fig. 6). First, push the high-pressure hose end completely onto the high-pressure water outlet, then screw it on clockwise.

Fig. 6 (BACK)

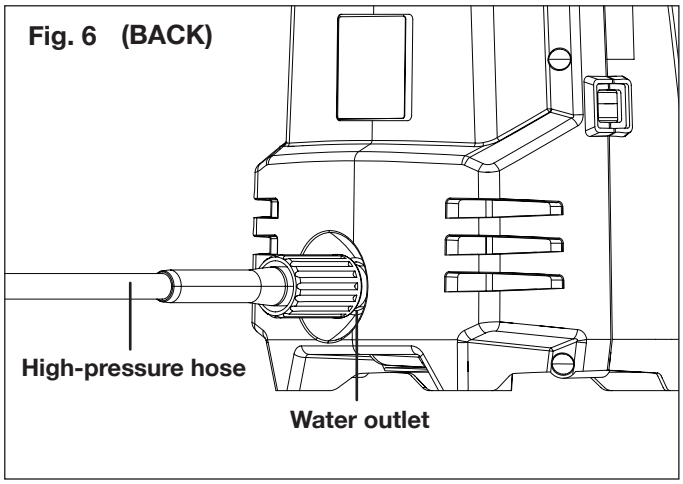

⚠WARNING! Keep hose away from sharp objects. Bursting hoses may cause injury. Examine hoses regularly and replace if damaged. Do not attempt to mend a damaged hose.

7. Connect the garden hose adapter (female coupler) to the water inlet of the pressure washer, then thread your garden hose (male end) into the garden hose garden hose adapter (Fig. 7). The garden hose must have an internal diameter of at least 13 mm (1/2 in.) and must be reinforced. The water supply must be at least equal to the washer delivery capacity.

   NOTE: The machine is not suitable for connection to the potable water main.

Fig. 7 (FRONT)

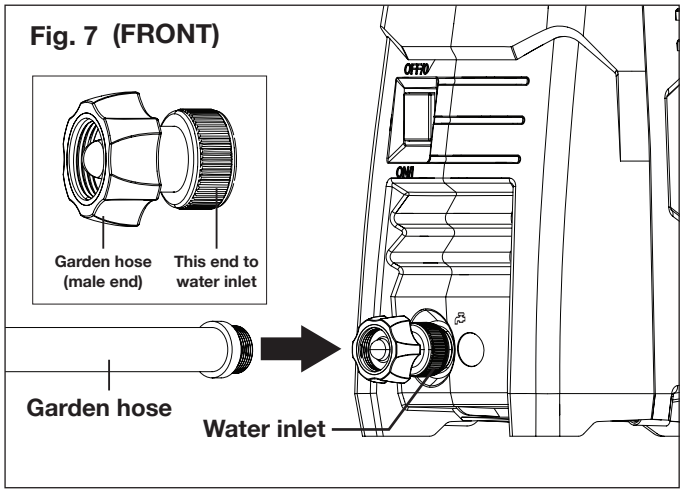

8. Attach garden hose to water supply (Fig. 8).

Fig. 8

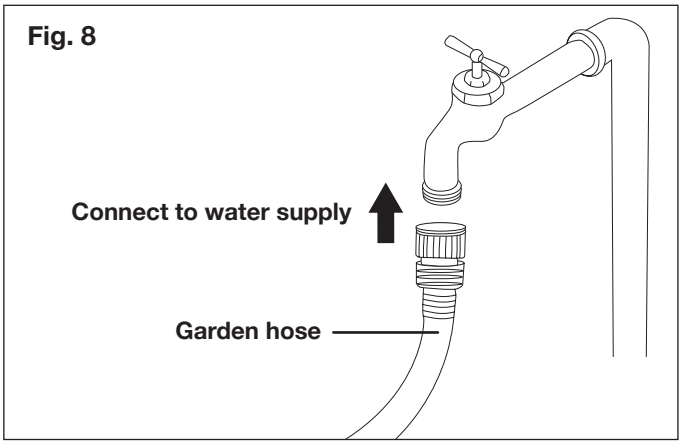

⚠WARNING! Do not connect to potable water system.

⚠WARNING! If connection is made to a potable water system, the system shall be protected against backflow

⚠WARNING! The intake water temperature must not exceed 104ºF/40ºC. The water supply must not exceed 0.7 MPa.

⚠CAUTION! The washer must only be used with clean water; use of unfiltered water containing corrosive chemicals will damage the washer.

9. Make sure the motor switch is pushed to the OFF (0) position before plugging the unit into the power outlet (Fig. 9).

Fig. 9

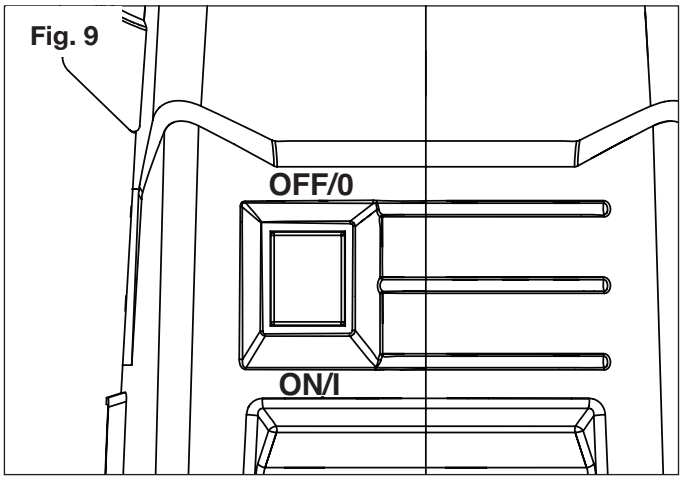

Operation

⚠**IMPORTANT!** This pressure washer is equipped with a micro-switch sensitive to water flow. This Total Stop System (TSS) senses water flow in the pump. When the trigger is released, water stops flowing through the pump. The TSS then automatically turns the motor off to protect the pump from overheating, thus saving energy and prolonging pump life.

1. Check that the electrical supply voltage and frequency (Volt/Hz) correspond to those specified on the pressure washer rating plate. If the power supply is correct, you may now plug the pressure washer into the power outlet (Fig. 10).

Fig. 10

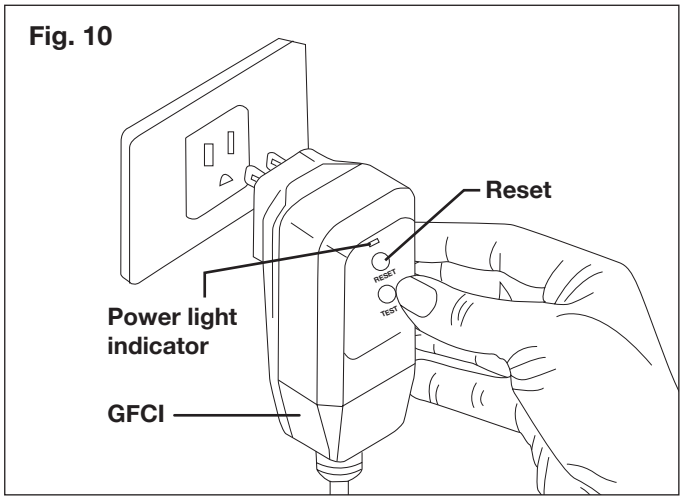

NOTE: The GFCI may need to be reset when first plugged into the electric outlet. Press the "Reset" button until the power light indicator on the GFCI illuminates.

2. Position the washer as CLOSE as possible to the water supply.
3. The washer must be used on a secure and stable surface in a standing, upright position (Fig. 11).

Fig. 11

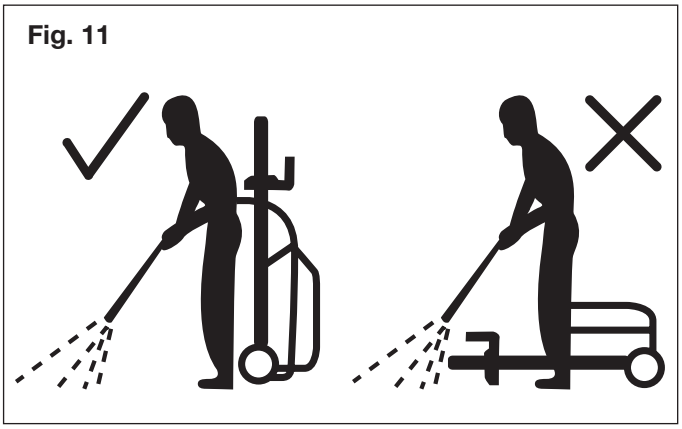

4. Turn the water supply tap on completely.
5. Unlock the safety lock, then press the trigger for a few seconds until the water flow is steady. Operating the pressure washer in this manner will allow air to escape and discharge residual pressure in the hose (Fig. 12).

Fig. 12

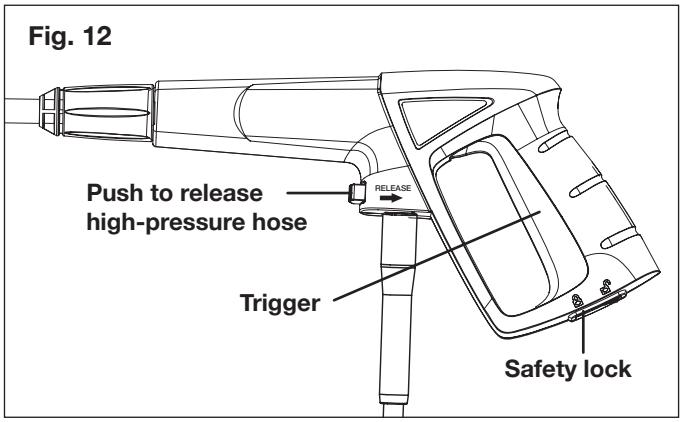

6. Keeping the trigger pressed, turn the switch to the ON (I) position to start the pressure washer.
7. When re-starting the motor, always keep the trigger pressed.

   NOTE: The motor only runs when the trigger is depressed and shuts off when the trigger is released.

Using the adjustable spray wand

⚠**WARNING!** High-pressure jets can be dangerous if subject to misuse. The jet must not be directed at persons, pets, live electrical equipment, or the appliance itself.

1. The washer is equipped with an adjustable nozzle.
2. The water pressure can be adjusted from low pressure (–) to high pressure (+) by turning the pressure adjustment knob. The nozzle tip can be adjusted from pencil spray (wide open tip) to fan spray (narrow tip) by turning the nozzle tip adjustment knob (Fig. 13).

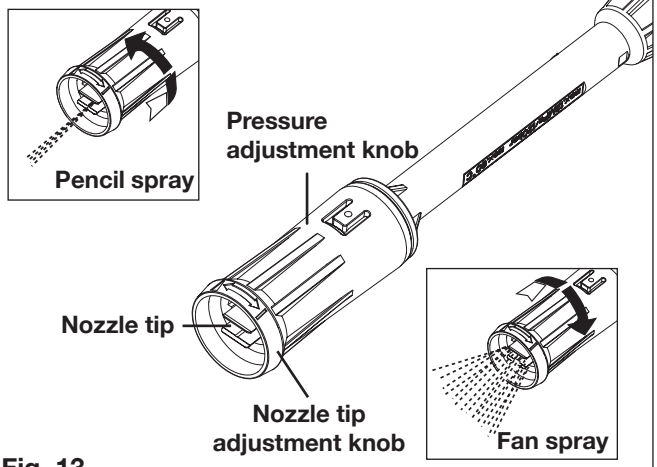

Fig. 13

⚠**WARNING!** Do not adjust the nozzle while the trigger is squeezed. Failure to do so could result in damage.

Recommended cleaning procedure

1. For additional cleaning power, a detergent spray bottle attachment (Model SPX1DT) is available as an add-on accessory for the SPX201E. Visit sunjoe.com to purchase.

⚠**CAUTION!** Only use detergents specifically recommended for use with pressure washers.

2. Load the bottle with a suitable, non-corrosive detergent and attach it the spray gun (Fig. 14).

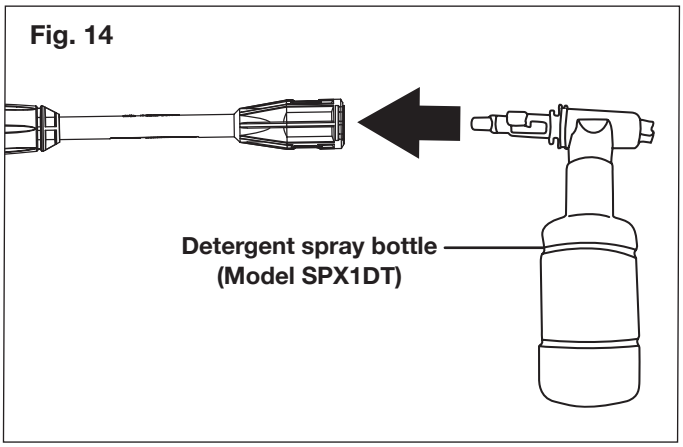

Fig. 14

3. With the nozzle tip adjusted to a low-pressure fan spray, apply detergent from the bottom to the top of the dry surface to be cleaned. Applying detergent in this manner will dissolve dirt most effectively.

   NOTE: Wetting the surface first is not recommended as it dilutes the detergent and reduces its cleaning ability.
4. Allow the detergent to remain on the surface for a short time before rinsing with the pressure washer. Do not allow the detergent to dry on the surface.

Shutting down

1. Turn the switch to the OFF (0) position and unplug the power cord from the outlet.
2. Turn off the water source.
3. Hold the trigger to release water pressure.
4. Disconnect the garden hose from the water inlet on the unit.
5. Disconnect the high-pressure hose connection on the trigger gun handle.
6. Release the trigger and engage the gun safety lock.

⚠**WARNING!** Turn off the water supply and squeeze the trigger to depressurize the unit. Failure to do so could result in personal injury due to discharge of high-pressure water.

Taking a break

If you are taking a break of five minutes or more between cleaning tasks:

1. Engage the gun safety lock (Fig. 12).
2. Turn the switch to the OFF (0) position.
3. Unplug the power cord from the outlet.

Storage

⚠**CAUTION!** Always store your pressure washer in a location where the temperature will not fall below 32°F (0°C). The pump in this machine is susceptible to permanent damage if it freezes. **FREEZE DAMAGE IS NOT COVERED BY THE WARRANTY.**

- Store the pressure washer indoors in a dry, covered area where it is not subject to adverse weather conditions.
- It is important to store this product in a frost-free area.
- Always empty water from all hoses, the pump, and the detergent bottle (if using) before storing.

⚠**CAUTION!** The use of a pump protector is recommended to prevent cold weather damage during storage over the winter months.

Winterizing + long-term storage

If you must store your pressure washer in a location where the temperature falls below 32ºF (0ºC), you can minimize the chance of damage to your machine by utilizing the following procedure:

- Disconnect all water connections.
- Turn on the machine for a few seconds until the remaining water in the pump exits. Turn off immediately.
- Do not allow the high-pressure hose to become kinked.
- Store the machine and accessories in a room that does not reach freezing temperatures.
- Do not store near a furnace or other sources of heat that may dry out the pump seals.
- Operate the pressure washer with non-corrosive/non-toxic anti-freeze, a pump saver, or a pump protector before storing for the winter.

⚠**WARNING!** Before reusing, completely flush the unit out with clear water. Anti-freeze products can damage paintwork, so you must ensure there is no anti-freeze left in the system before using it again.

Maintenance

⚠**CAUTION!** Before working on the pressure washer, disconnect the plug from the power supply socket.

1. To ensure good performance, check and clean the water inlet filter (Fig. 15). Remove the pre-filter and water inlet filter and rinse with warm water to prevent any foreign matter from clogging the pump (Figs. 16 – 17).

Fig. 15

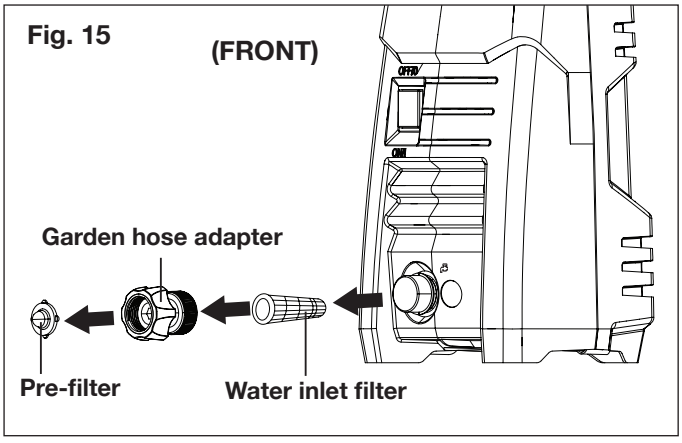

Fig. 16

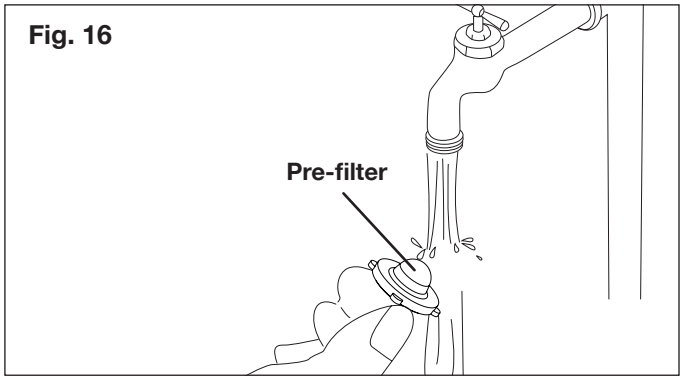

Fig. 17

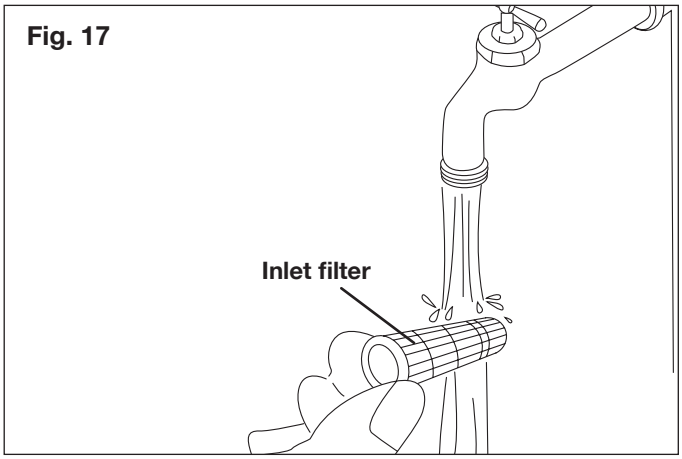

2. Clean the nozzle with the needle clean-out tool provided (Fig. 18). Remove the spray wand from the gun; remove any dirt from the nozzle hole and rinse.

Fig. 18

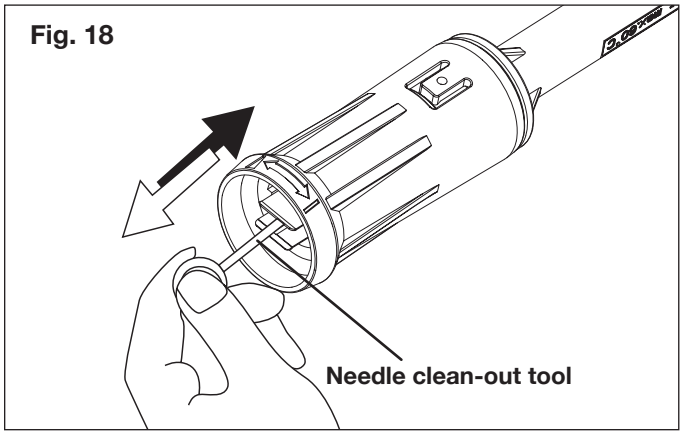

Disposal

Recycling the washer

- Do not dispose of electrical appliances as unsorted municipal waste. Use separate collection facilities.
- Contact your local government agency for information regarding the collection systems available.
- If electrical appliances are disposed of in landfills or dumps, hazardous substances can leak into the groundwater and get into the food chain, damaging your health and well-being.
- When replacing old appliances with new ones, the retailer is legally obligated to take back your old appliance for disposal at least free of charge.

Service + Support

If your Sun Joe® SPX201E electric pressure washer requires service or maintenance, please call the Snow Joe® + Sun Joe® customer service center at 1-866-SNOWJOE (1-866-766-9563).

Model + Serial Numbers

When contacting the company, reordering parts, or arranging service from an authorized dealer, you will need to provide the model and serial numbers, which can be found on the decal located on the housing of the unit. Copy these numbers into the space provided below.

Record the following numbers from the housing or handle of your new product:

Model #:

S | P | X | 2 | 0 | 1 | E | | | | | | | | | | |

Serial #:

| | | | | | | | | | | | | | | | | |

Troubleshooting

- Disconnect the unit from the electrical power supply before carrying out maintenance on the machine or when checking that its parts are in proper working order.
- To avoid unnecessary hassles, consult the following table before contacting customer service with any mechanical issues.

Problems	Possible Cause	Possible Solution
Machine refuses to start	• Power failure/machine not plugged into a working receptacle. • Defective socket. • Fuse has blown. • Defective extension cord.	• Check to make sure machine is plugged into a working outlet. • Check the power cord and reset the GFCI. Try a different outlet. • Replace fuse. Switch off any other machines that are using the same circuit. • Try the unit without an extension cord.
Fluctuating pressure	• Pump sucking air. • Valves dirty, worn out, or stuck. • Pump seals worn out.	• Check the hoses and connections are airtight. • Clean or replace valves/seals. • Please call the Snow Joe® + Sun Joe® customer service center at 1-866-SNOWJOE (1-866-766-9563) for assistance.
Machine stops	• Fuse has blown. • Incorrect mains voltage. • Thermal sensor activated. • Nozzle partially blocked.	• Replace fuse. Switch off other machines using the same circuit. • Check that the mains voltage corresponds to specification on the model tag. • Leave the washer for 5 minutes to cool down. • Clean the nozzle.
Fuse blows	• Fuse too small.	• Install a fuse with a higher amp rating than the amp consumption of the machine. Try the unit without an extension cord.
Machine pulsating	• Air in inlet hose. • Inadequate supply of mains water. • Nozzle partially blocked. • Water filter blocked. • Hose kinked.	• Allow machine to run by holding the trigger until regular working pressure resumes. • Check that the water supply corresponds to the specifications required. • **WARNING!** Avoid using long, thin hoses (minimum 1/2 in. diameter). • Clean the nozzle. • Clean the water inlet filter. • Straighten out the hose to remove any kinks/blockages.
Machine often starts and stops by itself	• Pump/spray gun is leaking. • Trigger mechanism is broken.	• Please call the Snow Joe® + Sun Joe® customer service center at 1-866-SNOWJOE (1-866-766-9563) for assistance.
Machine starts, but no water comes out	• Pump/hoses or accessories frozen. • No water supply. • Water inlet filter blocked. • Nozzle blocked.	• Wait for pump/hoses or accessories to thaw. • Connect inlet water. • Clean the water inlet filter. • Clean the nozzle.

Optional Accessories

⚠**WARNING!** ALWAYS use only authorized Snow Joe® + Sun Joe® replacement parts and accessories. NEVER use replacement parts or accessories that are not intended for use with this electric pressure washer. Contact Snow Joe® + Sun Joe® if you are unsure whether it is safe to use a particular replacement part or accessory with your pressure washer. The use of any other attachment or accessory can be dangerous and could cause injury or mechanical damage.

Accessories	Item	Model
① 	Sun Joe® House + Deck All-Purpose Pressure Washer Rated Concentrated Cleaner Sun Joe® Premium Snow Foam Pressure Washer Rated Car Wash Soap + Cleaner Sun Joe® All-Purpose Heavy Duty Pressure Washer Rated Cleaner + Degreaser	SPX-HDC1G SPX-FCS1G SPX-APC1G
② 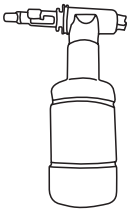	Detergent Spray Bottle	SPX1DT
③ 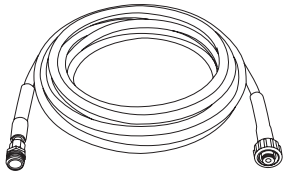	25-Foot Extension Hose for SPX Pressure Washer Series	SPX-25H
④ 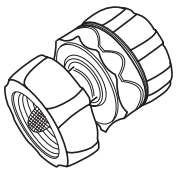	Solid Brass Universal Quick Connector (Garden Hose to Pressure Washer Adapter)	SPX-UQC

Sun Joe's complete line of premium pressure washer accessories and attachments make it easy to get your dirty work done, and also help you get the most out of your model!

SHOP ONLINE now at sunjoe.com

NOTE: Accessories are subject to change without any obligation on the part of Snow Joe® + Sun Joe® to provide notice of such changes. Accessories can be ordered online at sunjoe.com or via phone by contacting the Snow Joe® + Sun Joe® customer service center at 1-866-SNOWJOE (1-866-766-9563).

SNOW JOE® + SUN JOE® CUSTOMER PROMISE

ABOVE ALL ELSE, Snow Joe® + Sun Joe® are dedicated to you, our customer. We strive to make your experience as pleasant as possible. Unfortunately, there are times when a product does not work or breaks under normal operating conditions. We think it's important that you know what you can expect from us. That's why we created the Snow Joe® + Sun Joe® promise.

OUR PROMISE: Snow Joe® + Sun Joe® warrant new products for two years from the date of purchase. If your product does not work, or there's an issue with a specific part, we will fix this by either sending you a free replacement part or by sending you a new or comparable product at no charge. How cool is that! Before you know it, you'll be back in action cutting, sawing, mowing, washing and…?

PRODUCT REGISTRATION:

Snow Joe®, LLC ("Snow Joe® + Sun Joe®") strongly encourages you to register your purchase. You can register online at **snowjoe.com/register**, or by printing and mailing in a registration card available online from our website, or calling our Customer Service Department at **1-866-SNOWJOE (1-866-766-9563)**, or by e-mailing us at **help@snowjoe.com**. Failure to register your product purchase will not diminish your warranty rights. However, registering your purchase will allow Snow Joe® + Sun Joe® to better serve you with any of your customer service needs.

WHO CAN SEEK WARRANTY COVERAGE?

This Warranty is extended by Snow Joe® + Sun Joe® to the owner of this Machine (a "Machine" consists of a product powered by a motor) for residential and personal household use only. This Warranty does not apply to products used for commercial, rental or re-sale purposes. Should ownership of this machine change during the 2-year period, please update the Machine's owner information at **snowjoe.com/register**.

WHAT IS COVERED?

Snow Joe® + Sun Joe® warrants to the owner that if this Machine fails within 2 years from the date of purchase due to a defect in material or workmanship or as a result of normal wear and tear from ordinary household use, Snow Joe® + Sun Joe® will send a replacement part or product, as needed, free of charge and with free shipping to the original purchaser.

If, in Snow Joe® + Sun Joe®'s sole discretion, the failed Machine cannot be repaired with a part, Snow Joe® + Sun Joe® will elect to either (A) send a new Machine at no charge and with free shipping or (B) refund the full purchase price to the owner.

WHAT IS NOT COVERED?

This Warranty does not apply to the Machines that have been used commercially or in non-household applications. This Warranty does not cover cosmetic changes that do not affect performance. This Warranty is only valid if the Machine is used and maintained in accordance with the instructions, warnings and safeguards contained in the owner's manual. Snow Joe® + Sun Joe® will not be responsible for the cost of any unauthorized warranty repairs. This warranty does not cover any cost or expense incurred by the purchaser in providing substitute equipment or service during reasonable periods of malfunction or non-use of this product while waiting for a replacement part or unit under this warranty.

Wearing parts like belts, augers, chains and tines are not covered under this warranty, and can be purchased at **snowjoe.com** or by calling **1-866-SNOWJOE (1-866-766-9563)**. Batteries are covered in full for 2 years from the date of purchase.

Repair, replacement or refund of the purchase price are the exclusive remedies of purchaser and the sole liability of Snow Joe® + Sun Joe® under this warranty. No employee or representative of Snow Joe® + Sun Joe® is authorized to make any additional warranty or any modification to this warranty which may be binding upon Snow Joe® + Sun Joe®. Accordingly, purchaser should not rely upon any additional statements made by any employee or representative of Snow Joe® + Sun Joe®. In no event, whether based on contract, indemnity, warranty, tort (including negligence), strict liability or otherwise, shall Snow Joe® + Sun Joe® be liable for any special, indirect, incidental, or consequential damages, including, without limitation, loss of profit or revenue.

Some states do not allow limits on warranties. In such states, the above limitations may not apply to you.

Outside the USA, other warranties may apply.



sunjoe.com