SUNJOE®

14.5A ELECTRIC PRESSURE WASHER WITH HOSE HOLDER

3000 PSI MAX PRESSURE AT INITIAL DISCHARGE PER CSA INTERNAL PRESSURE TESTING
1.3 GPM MAX FLOW WITH NOZZLE OPEN AT MINIMUM PRESSURE

OPERATOR'S MANUAL

A Division of Snow Joe®, LLC

Model SPX4600

Form No. SJ-SPX4600-880E-MR4

IMPORTANT!
Safety Instructions

All Operators Must Read These Instructions Before Use

⚠**WARNING!** This indicates a hazardous situation, which, if not avoided, could result in death or serious injury.

⚠**CAUTION!** This indicates a hazardous situation, which, if not avoided, could result in minor or moderate injury.

⚠**DANGER!** This indicates a hazardous situation, which, if not followed, will result in death or serious injury.

General Safety

⚠**WARNING!** This appliance is not intended for use by children or by unassisted, unsupervised persons whose physical, sensory or mental capabilities prevent them from using it safely. Children should be supervised to ensure that they do not play with the appliance.

Before starting up your machine, please check it carefully for any defects. If you find any, do not start up your machine. Contact your authorized Snow Joe® + Sun Joe® dealer or call the Snow Joe® + Sun Joe® customer service center at 1-866-SNOWJOE (1-866-766-9563).

⚠**WARNING!** When using the pressure washer, basic safety precautions should always be followed to reduce the risk of fire, electric shock, and personal injury. These include:

- **Know your product –** Know how to stop the machine and bleed pressure quickly. Thoroughly familiarize yourself with the controls.
- **Keep bystanders away –** All visitors and pets should be kept a safe distance away from the work area.
- **Use the right product –** Do not use this machine for any job except that for which it is intended.
- **Dress properly –** Do not wear loose clothing or jewelry. They can get caught in moving parts. Protective rubber gloves and non-slip footwear are recommended when working outdoors.
- ⚠**CAUTION! –** Exercise caution to avoid slipping or falling. Wear protective footwear that will protect your feet and improve your footing on slippery surfaces.
- **Stay alert –** Watch what you are doing. Use common sense. Do not operate the pressure washer when you are tired, or under the influence of alcohol or drugs.
- **Do not overreach –** Keep proper footing and balance at all times.
- **Avoid unintentional starting –** Do not carry a plugged-in machine with your finger on the trigger. Make sure the switch is off before plugging in the machine.
- **Do not abuse the cord –** Never carry the machine by the cord or yank the cord to disconnect it from the receptacle. Keep the cord away from heat, oil, and sharp edges.
- **Use safety glasses –** Also use safety footwear, snug-fitting clothing, protective gloves, hearing and head protection.
- **Check the water temperature –** This pressure washer is only meant to pump cold water. **NEVER** connect it to a hot water supply as it will significantly reduce the life of the pump.
- **Store indoors – NEVER** store the pressure washer outdoors or where it could freeze. The pump could be seriously damaged.
- **Ground Fault Circuit Interrupter (GFCI) –** This product is provided with a ground fault circuit interrupter built into the power cord plug. If replacement of the plug or cord is needed, use only identical replacement parts.
- **Inspect electrical cords –** The insulation of the power cord should be perfectly intact. If the power cord is damaged or shows any signs of wear or tear, do not use the pressure washer. Contact your authorized Snow Joe® + Sun Joe® dealer or call the Snow Joe® + Sun Joe® customer service center at 1-866-SNOWJOE (1-866-766-9563).

⚠**WARNING!** Do not use this appliance without reading this instruction manual.

⚠**WARNING!** This appliance has been designed for use with cleaning agents that are recommended by the manufacturer. The use of other cleaning agents or chemicals may adversely affect the safety of the appliance.

⚠**WARNING!** Do not use the appliance within range of persons unless they are wearing protective clothing.

⚠**WARNING!** High-pressure jets can be dangerous if subject to misuse. The jet must not be directed at persons, pets, live electrical equipment, or the appliance itself.

- Do not direct the jet at yourself or others in order to clean clothes or footwear.

© 2020 by Snow Joe®, LLC
All rights reserved. Original instructions.

SAVE THESE INSTRUCTIONS

- **Risk of explosion –** Do not spray flammable liquids.
- **Disconnect the tool –** Disconnect from the electrical power supply before performing any maintenance task.
- **Keep children away –** This high-pressure electric power washer must not be used by children or untrained personnel.
- To ensure appliance safety, use only original replacement parts from the manufacturer or those approved by the manufacturer.

⚠**WARNING!** Water that has flowed through backflow preventers is considered to be non-potable.

⚠**WARNING!** During cleaning, maintenance or when replacing parts, the machine must be disconnected from its power source by removing the plug from the socket outlet.

⚠**WARNING!** High-pressure hoses, fittings, and couplings are important for the safe operation of the appliance. Use only hoses, fittings, and couplings recommended by the manufacturer.

- **Check for damaged parts –** Do not use the appliance if the supply cord or other important parts of the appliance are damaged (e.g. safety devices, high-pressure hoses, trigger gun).

⚠**WARNING!** If an extension cord is used, the plug and socket must be of watertight construction.

⚠**WARNING!** Inadequate extension cords can be dangerous.

- This high-pressure electric power washer must not be used at temperatures below 32ºF (0°C).

⚠**WARNING!** Power cords on drums should always be completely unwound to prevent the cord from overheating.

- Power cord connections should be kept dry and off the ground.
- If the power cord is damaged, do not use the appliance. Contact your authorized Snow Joe® + Sun Joe® dealer or call the Snow Joe® + Sun Joe® customer service center at 1-866-SNOWJOE (1-866-766-9563).
- Keep the machine on a stable, flat surface during operation, handling, transportation, and storage. Sudden overturn of the machine can cause bodily injury.
- In the event of an accident or breakdown, switch off the machine immediately. (If contact with detergent occurs, rinse with an abundance of clean water.)

Electrical Safety

ATTENTION: If there are problems with the electrical mains, short voltage drops may appear when starting the equipment. This can, in turn, influence other equipment (e.g. cause a lamp to blink). If the MAINS-IMPEDANCE Zmax < 0.335 OHM, such disturbances are not expected. (If you require assistance, contact your local supply authority for further information.)

⚠**WARNING! Electrical Shock Hazard –** Before starting up your machine, please check it carefully for any defects. If you find any, do not start up your machine and contact your distributor.

The following should be observed when connecting the high-pressure electric power washer to the electric supply:

- The electric supply connection should be performed by a qualified person.
- The electric supply to this appliance should include either a residual current device that will interrupt the supply if the leakage current to the earth exceeds 30 mA for 30 ms or a device that will interrupt the earth circuit (GFCI).

IMPORTANT: Only use water without any impurities. If there is a risk of running sand into the inlet water (i.e. from your own well), an additional filter should be installed.

Grounding Instruction

This product must be grounded. If it should malfunction or breakdown, grounding provides a path of least resistance for electric current to reduce the risk of electric shock. This unit is equipped with a cord having an equipment-grounding conductor and a grounding plug. The plug must be plugged into an appropriate outlet that is properly installed and grounded in accordance with all local codes and ordinances.

⚠**DANGER!** Improper connection of the equipment-grounded conductor can result in a risk of electrocution. Check with a qualified electrician or service personnel if you are in doubt as to whether the outlet is properly grounded. Do not modify the plug provided with the unit. If it will not fit the outlet, have a proper outlet installed by a qualified electrician. Do not use any type of adapter with this unit.

Safety Devices

The spray gun features a locking device. When the lock is activated, the spray gun cannot be operated.

1. **Thermal sensor –** A thermal sensor protects the motor against overloading. If the thermal sensor is activated and the power is cut off, wait for a while until the motor is cool and restart the unit.
2. **Ground fault circuit interrupter (GFCI) protection –** This pressure washer is provided with a ground-fault circuit-interrupter (GFCI) built into the plug of the power-supply cord. This device provides additional protection from the risk of electric shock. Should replacement of the plug or

cord become necessary, use only identical replacement parts that include GFCI protection.

3. It is not recommended to use an extension cord with this pressure washer. The unit comes standard with a 35 ft GFCI power cord. Using an extension cord may cause a drop in line voltage resulting in loss of power and overheating.
4. If an extension cord is going to be used. Use only 3-wire extension cord that has 3-prong grounding type plug for the product. Use only extension cords that are intended for outdoor use. These extension cords are identified by marking "Acceptable for use with outdoor appliance; store indoors while not in use". Use only extension cord having an electrical rating not less than the rating of the product. Do not use damaged extension cords. Examine extension cord before using and replace if damaged. Do not abuse extension cord and do not yank on any cord to disconnect. Keep cord away from heat and sharp edges. Always disconnect extension cord from the receptacle before disconnecting the product from the extension cord.

⚠ WARNING ⚠

Electric shock may cause SEVERE INJURY or DEATH. Heed these warnings:

- Do not allow any part of the electric pressure washer to make contact with water while it is in operation. If the appliance becomes wet while turned off, wipe dry before starting.
- Do not use an extension cord over 25 ft. The pressure washer comes equipped with a 35 ft power cable. Combined cord length must not exceed 60 ft. Any extension cord must be 14-gauge (or heavier) to safely power the pressure washer.
- Do not touch the appliance or its plug with wet hands or while standing in water. Wearing rubber boots offers some protection.

EXTENSION CORD CHART

Cord Length:	25 ft (7.6 m)
Min. Wire Gauge (A.W.G.):	14

⚠**WARNING!** To reduce the risk of electrocution, keep all connections dry and off the ground. Do not touch plug with wet hand.

5. To prevent the appliance cord from disconnecting from the extension cord during operation, make a knot with the two cords as shown in Table 1.

Table 1. Method of Securing Extension Cord

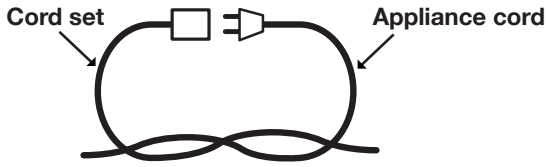

(A) Tie cord as shown

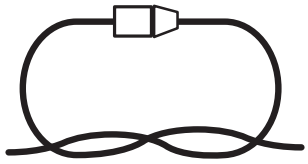

(B) Connect plug and receptacle

6. Do not abuse the cord. Never pull the pressure washer by the cord or yank the cord to disconnect it from the receptacle. Keep the cord away from heat, oil, and sharp edges.

Risk of electrocution

- Inspect cord before using.
- Do not use if cord is damaged.
- Keep all connections dry and off the ground.
- Do not touch plug with wet hands.
- Keep cord away from heat and sharp edges.
- Do not spray electrical apparatus and wiring.

Risk of explosion

- Do not spray flammable liquids.
- Do not use acids, bases, solvents, or any flammable material in this product. These substances can cause physical injuries to the operator and irreversible damage to the machine.

Additional safety instructions

- High-pressure: keep clear of nozzle.
- Injection hazard: equipment can cause serious injury if the spray penetrates the skin.
- Do not point the gun at anyone or at any part of the body.
- In case of skin penetration, seek medical aid immediately.
- Before servicing, cleaning, or removing any parts, shut off the power and relieve pressure.
- This machine is not suitable for connection to the potable water mains.

Product Description

Purpose

- This electric high pressure washer is intended for residential use. It is designed for medium-to-heavy duty cleaning jobs on boats, motorcycles, RV's, ATV's, trailers, decks, barbecues, siding, patio furniture, and more.

Areas of application

- Never use the machine in potentially explosive areas under any circumstances!
- The operating temperature must be between 32°F (0°C) and 104°F (40°C).
- The machine consists of an assembly with a pump, which is encased in a shock-absorbing housing. To provide the operator with an optimal working position, the machine is equipped with a spray wand and a non-slip handle grip, whose shape and configuration comply with applicable regulations.
- Do not cover or modify the spray wand or the spray nozzle in any way.
- The high-pressure electric power washer is designed to be used with cold water; higher temperatures can damage the pump.
- Do not use water that is dirty, gritty, or contains any chemical products, as such impurities could impair operation and shorten the life of the machine.

Safety Symbols

The following table depicts and describes safety symbols that may appear on this product. Read, understand, and follow all instructions on the machine before attempting to assemble and operate.

Symbols	Descriptions	Symbols	Descriptions
	**READ THE OPERATOR'S MANUAL(S) –** Read, understand, and follow all instructions in the user manual(s) before attempting to assemble and operate.		**WARNING!** Electrical shock hazard.
	**SAFETY ALERT –** Indicates a precaution, a warning, or a danger.		**WARNING!** Do not expose the unit to rain or wet conditions. Keep dry.
	**WEAR EYE AND HEARING PROTECTION –** For protection against injury, wear ear defenders and safety goggles.		To reduce the risk of injury, user must keep all bystanders at least 49 ft (15 m) away.
	Wear safety gloves during use to protect hands.		Wear non-slip footwear that will protect your feet and improve your footing on slippery surfaces.
	Store indoors. Never store the pressure washer outdoors. If the pump freezes, permanent damage may result.		Machine not suitable for connection to the potable water mains.
	Always keep the power cable away from heat sources, oils, or sharp edges. Immediately remove plug from the mains if the cable is damaged, frayed, or entangled.		**WARNING!** Turn the machine OFF and disconnect it from the power supply before inspecting, cleaning, changing accessories, or conducting any other maintenance task.

Know Your Electric Pressure Washer

Read the owner's manual and safety rules carefully before operating the pressure washer. Compare the illustration below to the unit in order to familiarize yourself with the location of the various controls and adjustments. Save this manual for future reference.

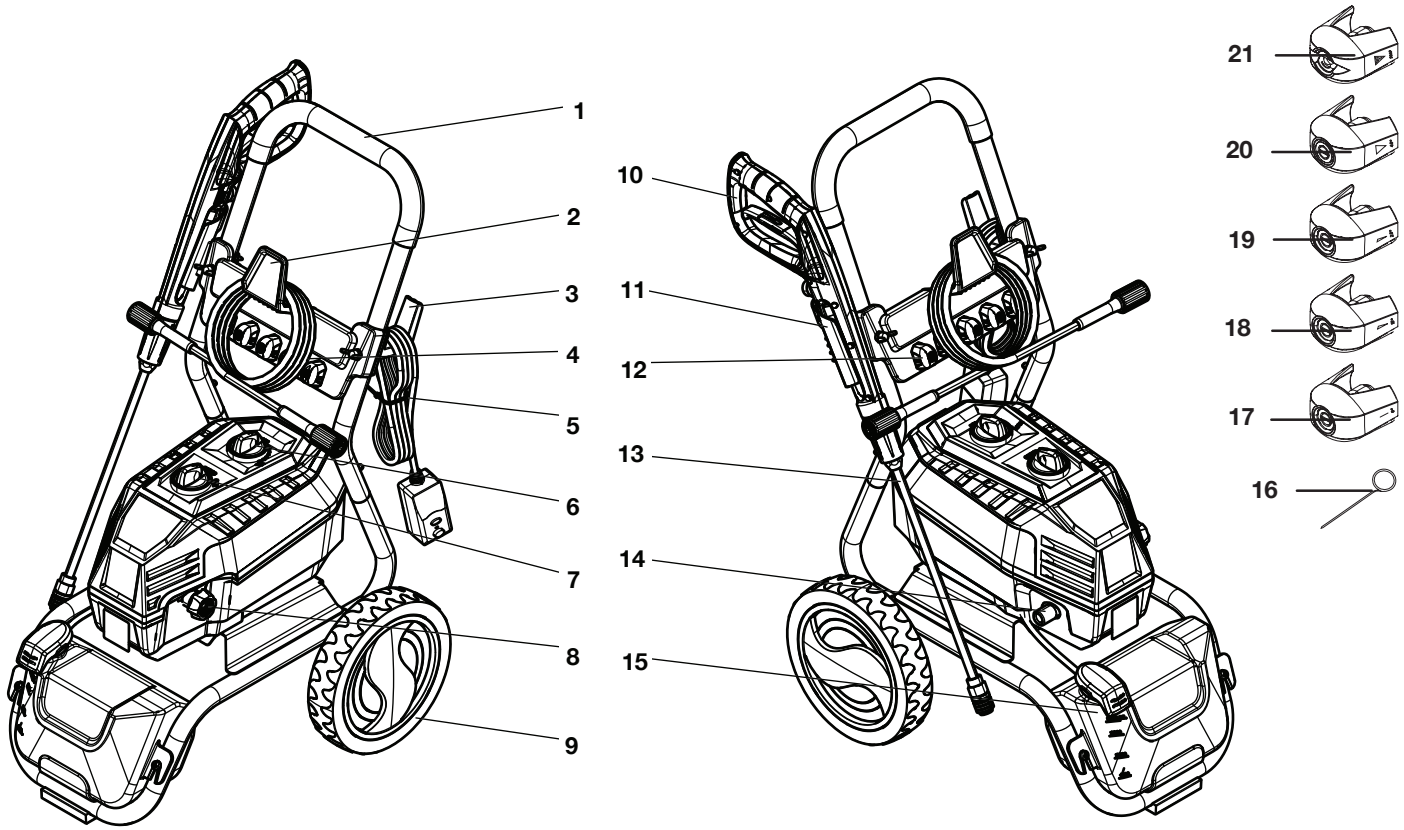

1. Soft grip
2. High-pressure hose holder
3. Power cord holder
4. High-pressure hose
5. Power cord with GFCI
6. Detergent dial
7. ON/OFF switch
8. Garden hose adapter/connection
9. Wheel (2)
10. Trigger gun
11. Trigger gun holder
12. On-board nozzle storage
13. Spray wand
14. Water outlet/high-pressure hose connection
15. Detergent tank
16. Needle clean-out tool
17. 0° Quick-Connect nozzle (orange)
18. 15° Quick-Connect nozzle (yellow)
19. 25° Quick-Connect nozzle (green)
20. 40° Quick-Connect nozzle (gray)
21. Soap Quick-Connect nozzle (black)

Technical Data

Rated Voltage ..... 120V ~ 60 Hz

Brushless Induction Motor 14.5-amp

Max Water Inlet Temperature ..... 104°F/40°C

Max Water Inlet Pressure ..... 0.7 MPa

Detergent Tank Capacity ..... 1 Gal (3.8 L)

High-pressure Hose Length .....20 ft (6 m)

Power Cord Length .....35 ft (10.7 m)

Weight ..... 36.6 lbs (16.6 kg)

Max Pressure at initial discharge ..... 3000 PSI per CSA internal pressure testing

Rated Pressure under typical load ..... 2300 PSI

Max Flow with nozzle open ..... 1.3 GPM at minimum pressure

Rated Flow under typical load ..... 1.1 GPM

Unpacking

Carton Contents

- Electric pressure washer with lower handle frame
- Upper handle frame
- Spray wand
- Trigger gun
- Hose holder panel
- Trigger gun holder
- Power cord holder
- Wheels (2)
- Hardware (2 wheel washers, 2 cotter pins, 2 thumb screws, 2 thumb screw washers, 2 nuts)
- Five (5) Quick-Connect nozzles (0º, 15º, 25º, 40º and Soap)
- Needle clean-out tool (included with manual packet)
- High-pressure hose
- Manuals with registration card

1. Carefully remove the pressure washer and check to see that all of the above items are supplied.
2. Inspect the product carefully to make sure no breakage or damage occurred during shipping. If you find damaged or missing parts, DO NOT return the unit to the store. Please call the Snow Joe® + Sun Joe® customer service center at 1-866-SNOWJOE (1-866-766-9563).

   NOTE: Do not discard the shipping carton and packaging material until you are ready to use your new electric pressure washer. The packaging is made of recyclable materials. Properly dispose of these materials in accordance with local regulations.

IMPORTANT! The equipment and packaging material are not toys. Do not let children play with plastic bags, foils, or small parts. These items can be swallowed and pose a suffocation risk!

⚠**WARNING!** Do not connect to power supply until assembly is complete. Failure to comply could result in accidental starting and possible serious personal injury.

Assembly

1. Insert the wheel shaft into the holes on the wheel clamp. Assemble the washer on the other side of the wheel shaft (Fig. 1).

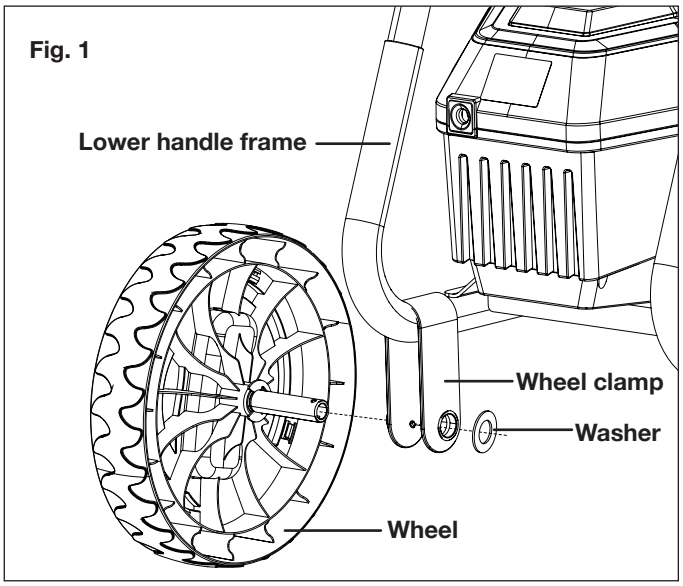

2. Fix the wheel by inserting the cotter pin into the hole on the end of the wheel shaft, as shown (Fig. 2).

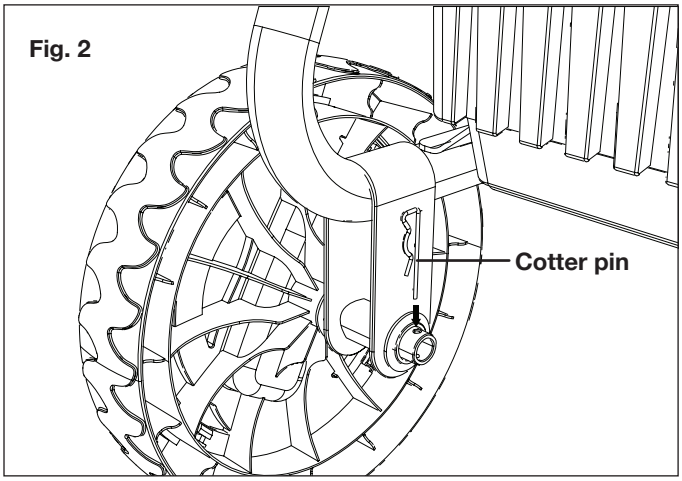

3. Repeat the above steps for the other wheel.
4. Fit the hose holder panel on the front of the upper handle frame and the power cord holder on the back left side of the upper handle frame, align the holes (Fig. 3).

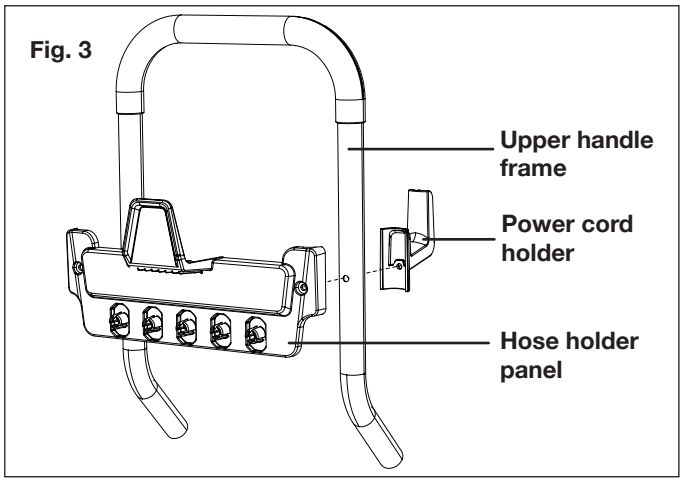

5. Fix the assembly with the thumb screw, washer, and nut as shown. Tighten to secure (Fig. 4).

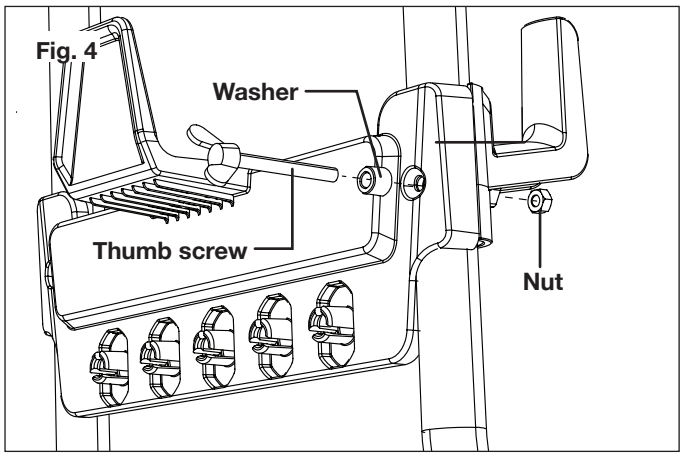

6. On the back right side of the upper handle frame, place the trigger gun holder and align the holes (Fig. 5). Fix with the other set of thumb screw, washer and nut (Fig. 6).

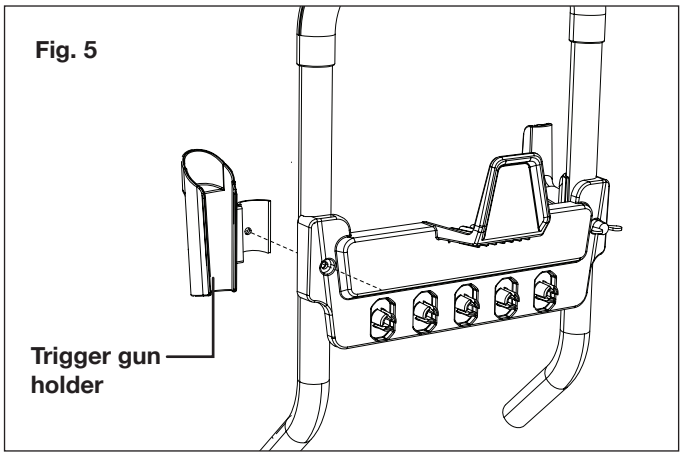

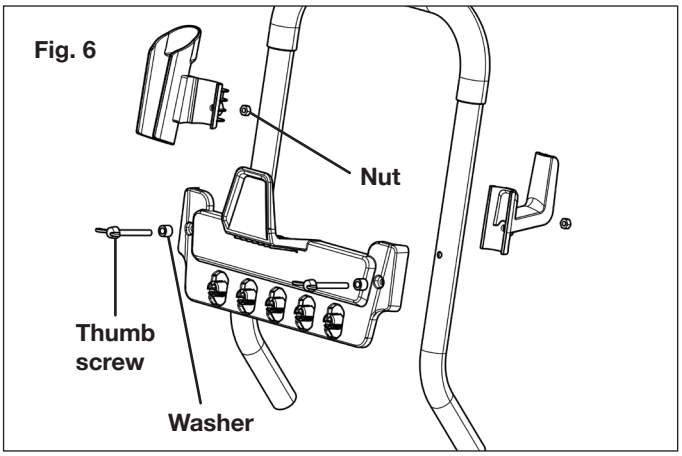

7. Slide the upper handle frame assembly into lower handle frame assembly, then depress the small button at the end of the lower handle frame, push and insert into upper handle until it snaps securely into place (Fig. 7).

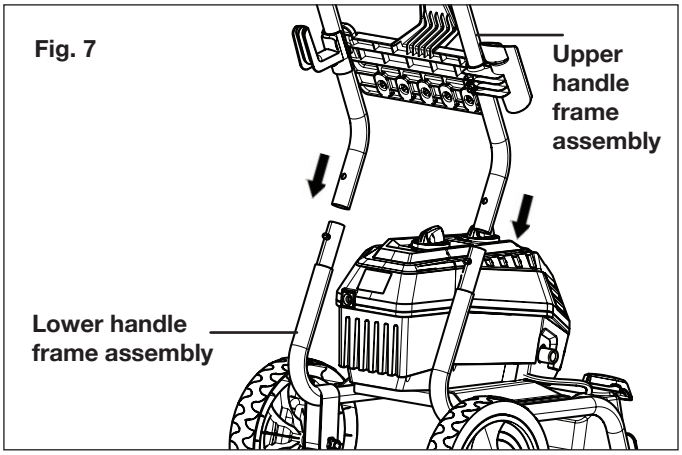

8. Fit the spray wand into the trigger gun and rotate it until the two parts are completely locked (Fig. 8).

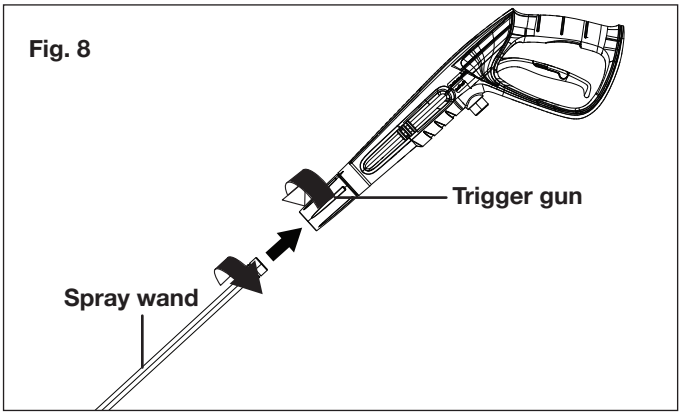

9. Connect the high-pressure hose to the trigger gun (Fig. 9).

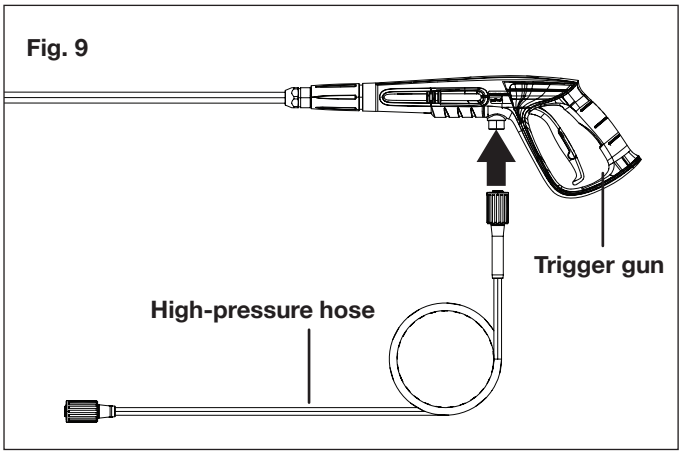

10. Connect the other end of high-pressure hose to the water outlet on the washer (Fig. 10).

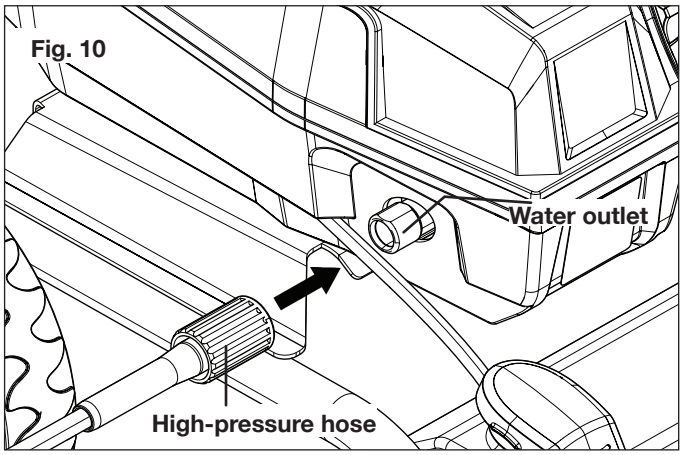

⚠WARNING! Keep hose away from sharp objects. Bursting hoses may cause injury. Examine hoses regularly and replace if damaged. Do not attempt to mend a damaged hose.

11. Thread your garden hose (male end) into the garden hose adapter (Fig. 11). The garden hose must have an internal diameter of at least 13 mm (1/2 in.) and must be reinforced. The water supply must be at least equal to the washer delivery capacity.

NOTE: The machine is not suitable for connection to the potable water main.

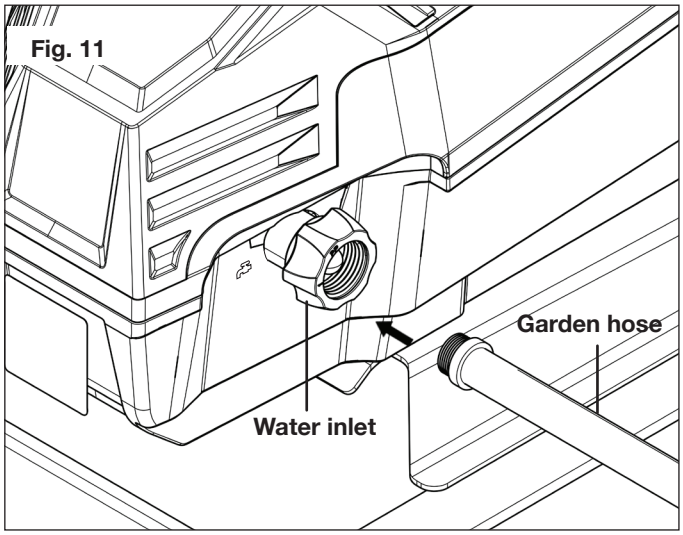

12. Attach garden hose to water supply (Fig. 12).

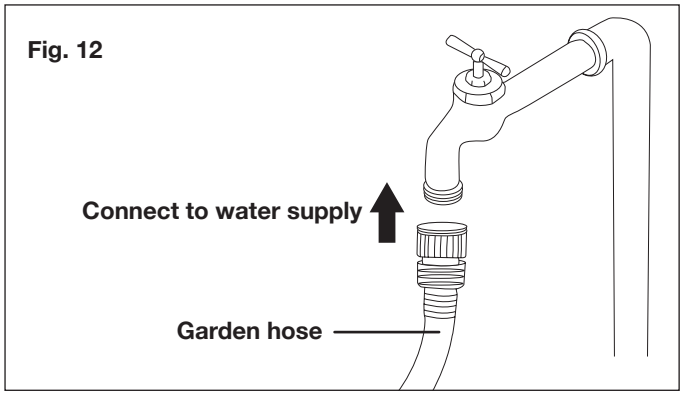

⚠WARNING! Do not connect to potable water system.

⚠WARNING! If connection is made to a potable water system, the system shall be protected against backflow.

⚠WARNING! The intake water temperature must not exceed 104°F/40°C. The water supply must not exceed 0.7 MPa.

⚠CAUTION! The washer must only be used with clean water; use of unfiltered water containing corrosive chemicals will damage the washer.

Operation

Using the Pressure Washer

⚠IMPORTANT! This pressure washer is equipped with a micro-switch sensitive to water flow. This Total Stop System (TSS) senses water flow in the pump. When the trigger is released, water stops flowing through the pump. The TSS then automatically turns the motor off to protect the pump from overheating, thus saving energy and prolonging pump life.

1. Position the washer as CLOSE as possible to the water supply.

2. The washer must be used on a secure and stable surface in a standing, upright position (Fig. 13).

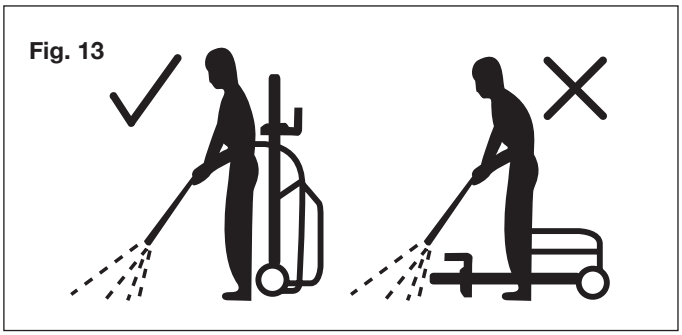

3. Make sure the unit is switched off before plugging the unit into the power outlet.

4. Check that the electrical supply voltage and frequency (Volt/Hz) correspond to those specified on the rating plate. If the power supply is correct, you may now plug the pressure washer into the power outlet (Fig. 14).

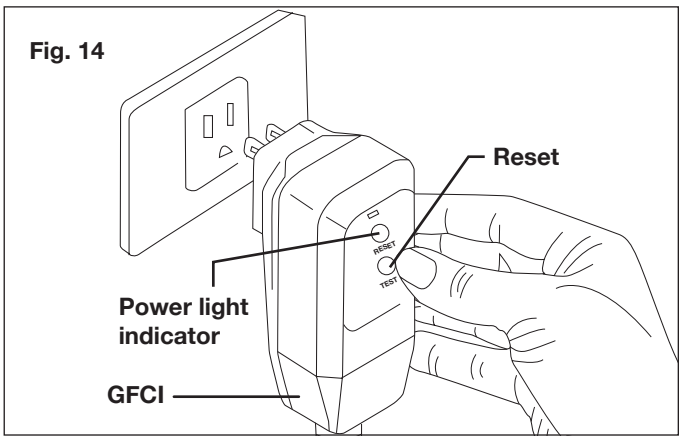

NOTE: The GFCI may need to be reset when first plugged into the electric outlet. Press the "Reset" button until the power light indicator on the GFCI illuminates when plugged in.

5. Turn the water supply tap on completely.
6. Make sure the safety lock is down and in its original position (Fig. 15), then press the trigger for a few seconds until water flow is steady. This will allow air to escape and discharge any residual pressure in the hose.

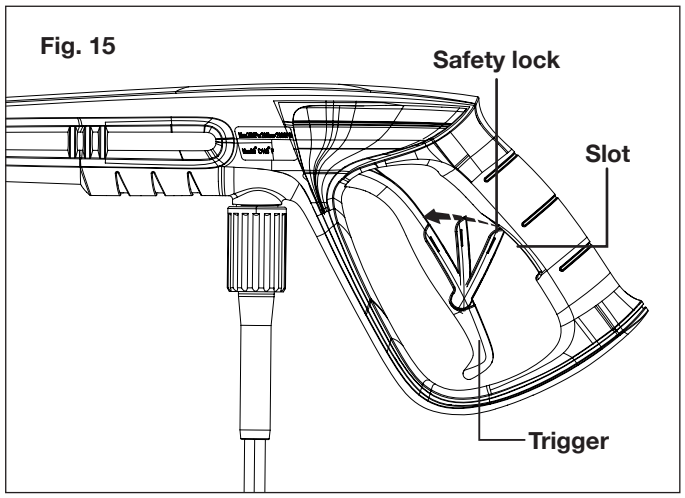

7. Turn the ON/OFF switch to the ON/I position to start the pressure washer (Fig. 16).

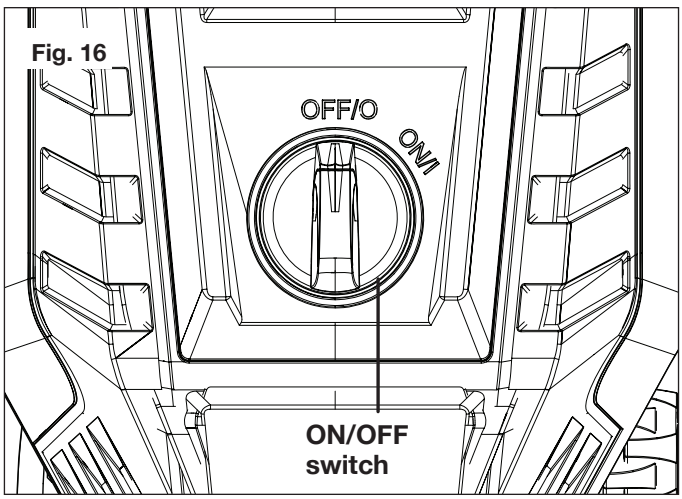

8. When re-starting the motor, always keep the trigger pressed.

   NOTE: The motor only runs when the trigger is operated and shuts off when the trigger is released.

Using Nozzles

Before beginning any cleaning task, determine the best nozzle for the job. Each of the nozzles has a different spray pattern. The nozzle patterns are 40˚ (for gentle cleaning), 25˚ (for all-purpose cleaning), 15˚ (for tough jobs), 0˚ (for spot cleaning or hard-to-reach areas) and the soap nozzle (for detergent application).

⚠**CAUTION! NEVER** change nozzles without locking the safety lock on the trigger handle.

⚠**WARNING!** High-pressure jets can be dangerous if subject to misuse. The jet must not be directed at persons, pets, live electrical equipment, or the appliance itself.

This electric pressure washer is equipped with five (5) Quick-Connect nozzles that easily snap onto the Quick-Connect collar of the spray wand.

To connect a nozzle to the spray wand:

1. Turn off the pressure washer and shut off the water supply. Pull the trigger to release water pressure.
2. Engage the safety lock on the trigger handle by pushing up on the safety lock until it *clicks* into the slot (Fig. 17).

Fig. 17

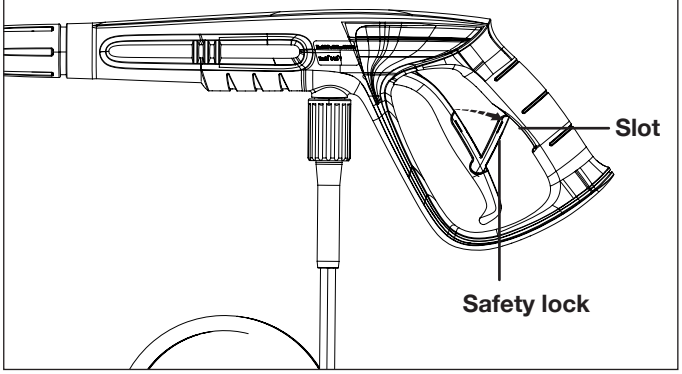

3. Snap the desired nozzle onto the Quick-Connect collar until it *clicks* into place (Fig. 18).

Fig. 18

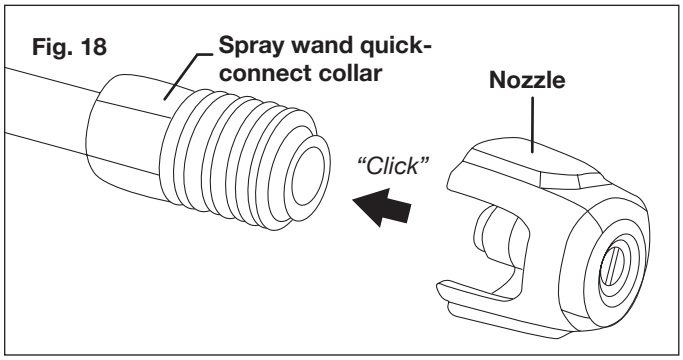

To disconnect a nozzle from the spray wand once the cleaning job is complete:

1. Turn off the pressure washer and shut off the water supply. Pull the trigger to release water pressure.
2. Engage the safety lock on the trigger handle by pushing up on the safety lock until it *clicks* into the slot (Fig. 17).
3. Remove the nozzle by placing your hand over the nozzle while pulling back on the Quick-Connect collar.

⚠**WARNING!** Do not make changes to the nozzle while the trigger is engaged. Doing so could result in damage to the pressure washer or injury to the user.

Working with Detergents

When cleaning with the pressure washer, some cleaning tasks can be solved with water alone, but for most tasks cleaning with detergent allows for more effective dirt removal.

⚠**WARNING!** Use only detergents specifically designed for use with pressure washers, such as Sun Joe® HOUSE + DECK WASH (SPX-HDC1G), Sun Joe® SNOW FOAM AUTO WASH (SPX-FCS1G), or Sun Joe® HEAVY DUTY CLEANER (SPX-APC1G). **DO NOT USE** household detergents, acids, alkaline solutions, bleaches, solvents, flammable material, or industrial grade solutions. These could damage the pressure washer. Many detergents may require mixing prior to use. Prepare the cleaning solution as instructed on the solution bottle.

1. Remove the cap from the detergent tank and fill the tank with detergent (Fig. 19).

   NOTE: Many detergents may require mixing prior to use. Prepare the cleaning solution as instructed on the solution bottle.

Fig. 19

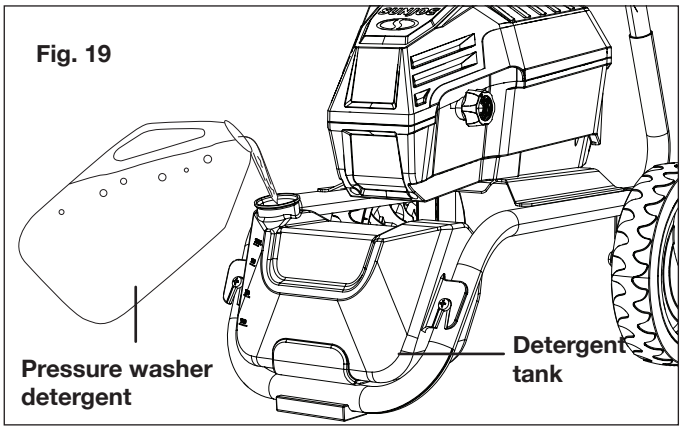

2. Install the soap nozzle (black) on the spray wand (Fig. 18).
3. Turn on the pressure washer. Pull the trigger to operate the unit. The liquid detergent will automatically mix with water and be discharged through the nozzle.

⚠**CAUTION!** Always test the detergent in an inconspicuous area before use.

4. Turn the detergent dial to adjust the suction volume of the detergent solution (Fig. 20).

Fig. 20

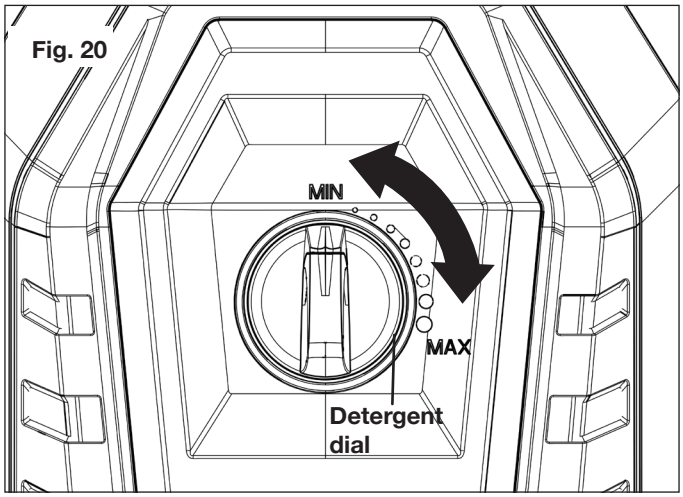

5. Apply detergent from the bottom to the top of the dry surface to be cleaned.

   NOTE: Wetting the surface first is not recommended as it dilutes the detergent and reduces its cleaning ability.

6. Allow the detergent to remain on the surface for a short time before rinsing. Do not allow the detergent to dry on

the surface.

7. Upon completion of detergent application, detach the detergent tank to clean by removing the two screws that used to fix the detergent tank (Fig. 21).

Fig. 21

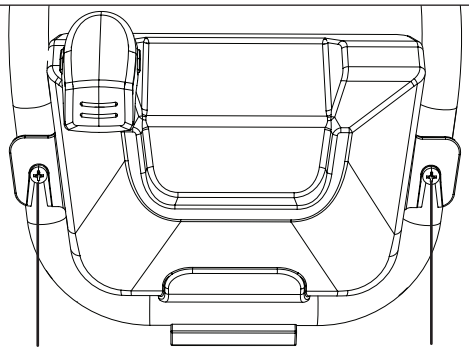

Detergent tank screw **Detergent tank screw**

8. Run clean water through the detergent tube to remove any remaining detergent. Then, remove and store for later use.

⚠**CAUTION!** Damage may occur to painted surfaces if the detergent is allowed to dry on the surface. Wash and rinse a small section at a time. Avoid working on hot surfaces or in direct sunlight.

⚠**CAUTION!** Failure to follow these cleaning instructions will cause the injection system to become clogged and inoperable.

Rinsing with the Pressure Washer

1. Turn off the pressure washer and shut off the water supply.
2. Pull the trigger to release water pressure.
3. Engage the safety lock on the trigger handle by pushing up on the safety lock until it clicks into the slot (Fig. 17).
4. Remove the soap nozzle by placing your hand over the nozzle while pulling back on the quick-connect collar.
5. Select the right nozzle for the job (Fig. 22):

Fig. 22

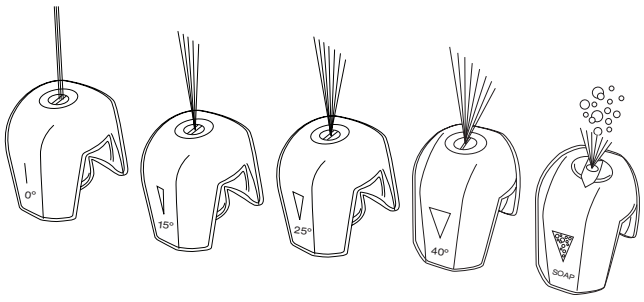

I) The 0º intense-jet nozzle (orange) is an extremely powerful nozzle that delivers a high-pressure, pencil-point jet stream. It is used to cut heavy dirt deposits in a small, concentrated area. It is ideal for dissolving stubborn substances, like tar and grease spots on concrete, or for removing caked mud from equipment. Use this nozzle to clean hard-to-reach areas including the facades of 2-story buildings or the undersides of lawn mowers and tractors.

NOTE: Care should be used when choosing the right nozzle to avoid permanently gouging wood or damaging fragile surfaces.

II) Use the 15º fan-tip nozzle (yellow) for intense cleaning jobs on hard surfaces. Applications include stripping paint, removing oil stains, grease, heavy mildew stains, and rust from steel. This nozzle should only be used in areas that can withstand the high-pressure from this nozzle.

III) Use the 25º fan-tip nozzle (green) to clean home siding, brick patios, wood decks, driveways, or sidewalks. When using this nozzle, test a small area first to avoid surface damage.

IV) Use the 40º wide-spray tip nozzle (gray) to clean items such as cars, trucks, boats, patio furniture, or lawn equipment.

V) Use the Soap nozzle (black) for low-pressure detergent application to clean equipment, remove mildew and oxidation stains from houses, clean bricks or degrease grimy surfaces.

NOTE: When using detergent, make sure to install the correct Soap nozzle (black). All of the other colored nozzles will not work for detergent application.

6. Start at the top of the area to be rinsed and work your way down, making sure to overlap your strokes.

⚠**IMPORTANT! NEVER USE:**

- Bleach, chlorine products, and other corrosive chemicals
- Liquids containing solvents (e.g. paint thinners, gasoline, oils)
- Tri-sodium phosphate products
- Ammonia products
- Acid-based products

These chemicals will harm the unit and will damage the cleaning surface.

Shutting down

1. Turn the switch to the OFF/0 position and unplug the power cord from the outlet.
2. Turn off the water source.
3. Hold the trigger to release water pressure.
4. Disconnect the garden hose from the water inlet on the unit.
5. Disconnect the high-pressure hose connection on the trigger gun handle.

6. Release the trigger and engage the gun safety lock.

⚠**WARNING!** Turn off the water supply and squeeze the trigger to depressurize the unit. Failure to do so could result in personal injury due to discharge of high-pressure water.

Taking a break

If you are taking a break of two minutes or more between cleaning tasks:

1. Engage the gun safety lock (Fig. 17).
2. Turn the switch to the OFF/0 position.
3. Unplug the power cord from the outlet.

Storage

⚠**CAUTION!** Always store your electric pressure washer in a location where the temperature will not fall below 32ºF (0ºC). The pump in this machine is susceptible to permanent damage if it freezes. **FREEZE DAMAGE IS NOT COVERED BY THE WARRANTY.**

- Store the pressure washer indoors in a dry, covered area where it is not subject to adverse weather conditions.
- It is important to store this product in a frost-free area.
- Always empty water from the hoses and the pump before storing.

⚠**CAUTION!** The use of a pump protector is recommended to prevent cold weather damage during storage over the winter months.

Winterizing + long-term storage

If you must store your pressure washer in a location where the temperature falls below 32ºF (0ºC), you can minimize the chance of damage to your machine by utilizing the following procedure:

- Disconnect all water connections.
- Turn on the pressure washer for a few seconds until the remaining water in the pump exits. Turn off immediately.
- Do not allow the high-pressure hose to become kinked.
- Store the machine and accessories in a room that does not reach freezing temperatures.
- Do not store near a furnace or other sources of heat that may dry out the pump seals.
- Operate the pressure washer with non-corrosive/non-toxic anti-freeze, a pump saver, or a pump protector before storing for the winter.

⚠**WARNING!** Before reusing, completely flush the unit out with clear water. Anti-freeze products can damage paintwork, so you must ensure there is no anti-freeze left in the system before using it again.

Maintenance

⚠**CAUTION!** Before working on the pressure washer, disconnect the plug from the power supply socket.

Clean the Adapter Filter and the Nozzle

1. To ensure good performance, check and clean the adapter filter (Fig. 23). Remove the filter and rinse with warm water to prevent any foreign matter from clogging the pump (Fig. 24).

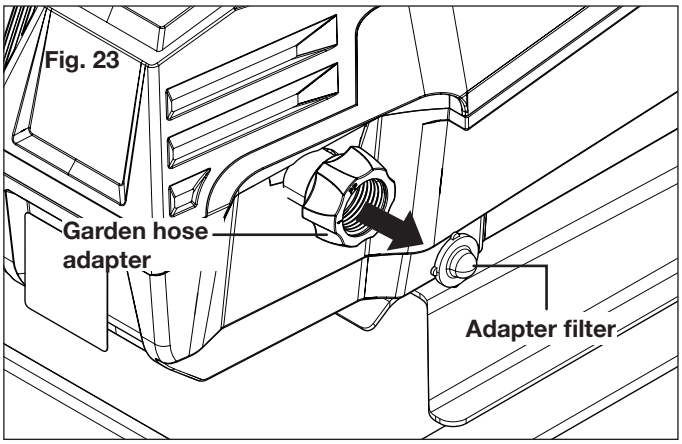

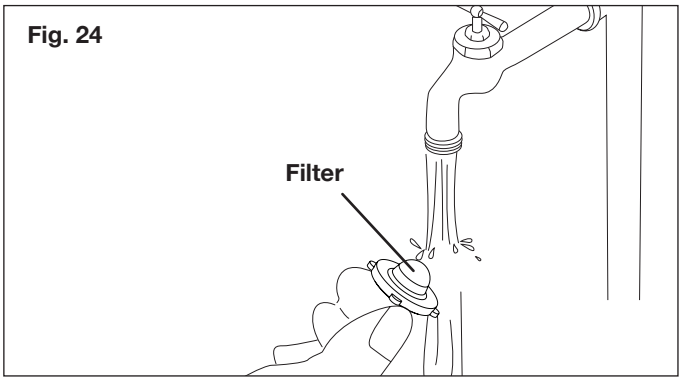

2. Clean the nozzle with the needle clean-out tool provided (Fig. 25). Remove any dirt from the nozzle hole and rinse.

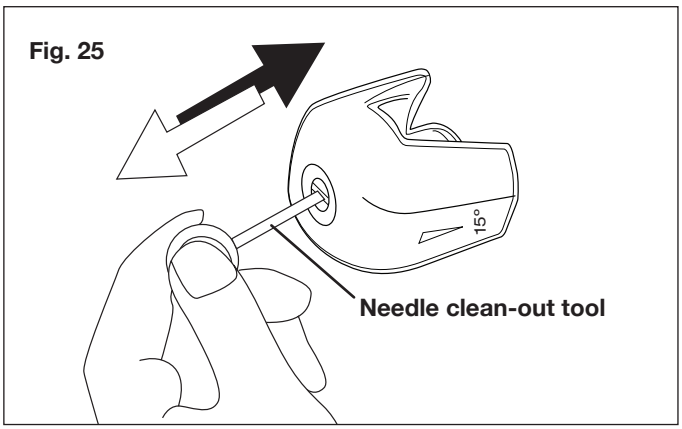

Disposal

Recycling the Pressure Washer

- Do not dispose of electrical appliances as unsorted municipal waste. Use separate collection facilities.
- Contact your local government agency for information regarding the collection systems available.
- If electrical appliances are disposed of in landfills or dumps, hazardous substances can leak into the groundwater and get into the food chain, damaging your health and well-being.

Service + Support

If your Sun Joe® SPX4600 electric pressure washer requires service or maintenance, please call the Snow Joe® + Sun Joe® customer service center at 1-866-SNOWJOE (1-866-766-9563).

Model + Serial Numbers

When contacting the company, reordering parts, or arranging service from an authorized dealer, you will need to provide the model and serial numbers, which can be found on the decal located on the housing of the unit. Copy these numbers into the space provided below.

Record the following numbers from the housing or handle of your new product:

Model #:

S P X 4 6 0 0

Serial #:

Troubleshooting

- Disconnect the unit from the electrical power supply before carrying out maintenance on the machine or when checking that its parts are in proper working order.
- To avoid unnecessary hassles, consult the following table before contacting customer service with any mechanical issues.

Problems	Possible Cause	Possible Solution
Machine refuses to start	• Power failure/machine not plugged into a working receptacle. • Defective socket. • Fuse has blown. • Defective extension cord.	• Check to make sure machine is plugged into a working outlet. • Check the power cord and reset the GFCI. Try a different outlet. • Replace fuse. Switch off any other machines that are using the same circuit. • Try the unit without an extension cord.
Fluctuating pressure	• Pump sucking air. • Valves dirty, worn out, or stuck. • Pump seals worn out.	• Check the hoses and connections are airtight. • Clean or replace valves/seals. • Please call the Snow Joe® + Sun Joe® customer service center at 1-866-SNOWJOE (1-866-766-9563) for assistance.
Machine stops	• Fuse has blown. • Incorrect mains voltage. • Thermal sensor activated. • Nozzle partially blocked.	• Replace fuse. Switch off other machines using the same circuit. • Check that the mains voltage corresponds to specification on the model label. • Let the washer cool down for 5 minutes, then restart. • Clean the nozzle.
Machine pulsating	• Air in inlet hose. • Inadequate supply of mains water. • Nozzle partially blocked. • Water filter blocked. • Hose kinked.	• Allow machine to run by holding the trigger until regular working pressure resumes. • Check that the water supply corresponds to the specifications required. • **WARNING!** Avoid using long, thin hoses (minimum 1/2 in. diameter). • Clean the nozzle. • Clean the water inlet filter. • Straighten out the hose to remove any kinks/blockages.
Machine often starts and stops by itself	• Pump/spray gun is leaking. • Trigger mechanism is broken.	• Please call the Snow Joe® + Sun Joe® customer service center at 1-866-SNOWJOE (1-866-766-9563) for assistance.
Machine starts, but no water comes out	• Pump/hoses or accessories frozen. • No water supply. • Water inlet filter blocked. • Nozzle blocked.	• Wait for pump/hoses or accessories to thaw. • Connect inlet water. • Clean the water inlet filter. • Clean the nozzle.

Optional Accessories

⚠**WARNING!** ALWAYS use only authorized Snow Joe® + Sun Joe® replacement parts and accessories. NEVER use replacement parts or accessories that are not intended for use with this electric pressure washer. Contact Snow Joe® + Sun Joe® if you are unsure whether it is safe to use a particular replacement part or accessory with your pressure washer. The use of any other attachment or accessory can be dangerous and could cause injury or mechanical damage.

Accessories	Item	Model
1 	Sun Joe® House + Deck All-Purpose Pressure Washer Rated Concentrated Cleaner Sun Joe® Premium Snow Foam Pressure Washer Rated Car Wash Soap + Cleaner Sun Joe® All-Purpose Heavy Duty Pressure Washer Rated Cleaner + Degreaser	SPX-HDC1G SPX-FCS1G SPX-APC1G
2 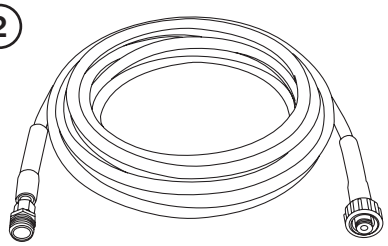	25-Foot Medium-duty Extension Hose for SPX Pressure Washer Series	SPX-25H
3 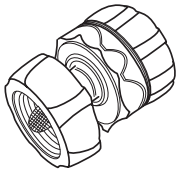	Solid Brass Universal Quick Connector (Garden Hose to Pressure Washer Adapter)	SPX-UQC

Sun Joe's complete line of premium pressure washer accessories and attachments make it easy to get your dirty work done, and also help you get the most out of your model!

SHOP ONLINE now at sunjoe.com

NOTE: Accessories are subject to change without any obligation on the part of Snow Joe® + Sun Joe® to provide notice of such changes. Accessories can be ordered online at sunjoe.com or via phone by contacting the Snow Joe® + Sun Joe® customer service center at 1-866-SNOWJOE (1-866-766-9563).

NOTES

NOTES



SNOW JOE® + SUN JOE® CUSTOMER PROMISE

ABOVE ALL ELSE, Snow Joe, LLC ("Snow Joe") is dedicated to you, our customer. We strive to make your experience as pleasant as possible. Unfortunately, there are times when a Snow Joe®, Sun Joe®, or Aqua Joe® product ("Product") does not work or breaks under normal operating conditions. We think it's important that you know what you can expect from us. That's why we have a Limited Warranty ("Warranty") for our Products.

OUR WARRANTY:
Snow Joe warrants new, genuine, powered and non-powered Products to be free from defects in material or workmanship when used for ordinary household use for a period of two years from the date of purchase by the original, end-user purchaser when purchased from Snow Joe or from one of Snow Joe's authorized sellers with proof of purchase. Because Snow Joe is unable to control the quality of its Products sold by unauthorized sellers, unless otherwise prohibited by law, this Warranty does not cover Products purchased from unauthorized sellers. If your Product does not work or there's an issue with a specific part that is covered by the terms of this Warranty, Snow Joe will elect to either (1) send you a free replacement part, (2) replace the Product with a new or comparable product at no charge, or (3) repair the Product. How cool is that!

This Warranty gives you specific legal rights, and you may also have other rights which vary from State to State.

PRODUCT REGISTRATION:
Snow Joe strongly encourages you to register your Product. You can register online at **snowjoe.com/register**, or by printing and mailing in a registration card available online from our website, or calling our Customer Service Department at **1-866-SNOWJOE (1-866-766-9563)**, or by e-mailing us at **help@snowjoe.com**. Failure to register your Product will not diminish your warranty rights. However, registering your Product will allow Snow Joe to better serve you with any of your customer service needs.

WHO CAN SEEK LIMITED WARRANTY COVERAGE:
This Warranty is extended by Snow Joe to the original purchaser and original owner of the Product.

WHAT IS NOT COVERED?
This Warranty does not apply if the Product has been used commercially or for non-household or rental applications. This Warranty also does not apply if the Product was purchased from an unauthorized seller. This Warranty also does not cover cosmetic changes that do not affect performance. Wearing parts like belts, augers, chains and tines are not covered under this Warranty, and can be purchased at **snowjoe.com** or by calling **1-866-SNOWJOE (1-866-766-9563)**.



sunjoe.com