ELECTRIC GRASS TRIMMER + EDGER

13-INCH | 4-AMP

OPERATOR'S MANUAL

A Division of Snow Joe®, LLC

Model TRJ13STE

Form No. SJ-TRJ13STE-880E-MR4

IMPORTANT!

Safety Instructions

All Operators Must Read These Instructions Before Use

Before using this electric tool, carefully read and observe the safety rules and instructions listed below. Before starting work, make sure that you know how to stop the machine in case of an emergency. The incorrect use of this machine could cause serious injury. Keep these instructions in a safe place and on hand so that they can be consulted when required.

⚠**DANGER!** The electric grass trimmer + edger should only be used for cutting lawns and for trimming along the borders of flower beds. Other uses of the trimmer + edger that are not indicated in these instructions could damage the unit or seriously injure the operator.

General Safety

1. **Avoid dangerous environments –** Do not use appliances in damp or wet locations. Do not use in rain.
2. **Keep children and bystanders away –** Children and other spectators, including pets, should be kept at least 50 feet (15 meters) away from the work area. When the grass is cut, stones and debris contained in the grass can be picked up by the trimmer + edger and dispersed into the air. These flying projectiles can cause blindness or other bodily injury.
3. **Dress properly –** Always wear suitable clothing when using the trimmer + edger to prevent head, hand, or feet injuries. Do not wear loose clothing or jewelry. They can get caught in moving parts.
4. **Use safety glasses –** Also use safety footwear, snug-fitting clothing, protective gloves, hearing and head protection.
5. **Use the right tools –** Do not use tools for any job except that for which they are intended.
6. **Avoid unintentional starting –** Do not carry plugged-in tool with finger on the trigger. Make sure the switch is off before plugging in the tool.
7. **Do not abuse the cord –** Never carry the tool by the cord or yank the cord to disconnect it from the receptacle. Keep the cord away from heat, oil, and sharp edges.
8. **Do not force the tool –** It will do the job better and with less likelihood of injury if it is used at the rate for which it was designed.
9. **Do not overreach –** Keep proper footing and balance at all times.
10. **Stay alert –** Watch what you are doing. Use common sense. Do not operate the trimmer + edger when you are tired, or under the influence of alcohol or drugs.
11. **Disconnect the tool –** Turn the trimmer + edger off and disconnect the plug when: the unit is not in use; it is left unattended; it is being examined because it is not working correctly; the power supply cable is damaged; the blade is being removed or changed; or when the trimmer is being moved from one place to another.
12. **Store idle tools indoors –** When not in use, tools should be stored indoors in a dry and high or locked-up place out of the reach of children.
13. **Maintain tools with care –** Keep cutting edges sharp and clean for best performance and to reduce the risk of injury. Follow instructions for lubricating and changing accessories. Inspect the trimmer + edger periodically and replace if damaged. Repair the trimmer + edger only at an authorized service facility. Keep handles dry, clean, and free from oil and grease.
14. **Checked for damaged parts –** Before continuing to use the trimmer + edger, a guard or other part that is damaged should be carefully checked to determine that it will operate properly and perform its intended function. Check for the alignment of moving parts, binding of moving parts, breakage of parts, mounting, and any other condition that may affect the tool's operation. A guard or other part that is damaged should be properly repaired or replaced by an authorized service center unless indicated elsewhere in this manual.

⚠**CAUTION!** The safety guard is critical to the safety of the operator and the safety of people standing within a safe distance of the trimmer + edger. The safety guard keeps the unit in good working order and must always be in place during operation. Failure to have the guard in place during operation is dangerous and will void the warranty.

15. **Keep away from the cutting line –** It can seriously injure the skin.
16. **Do not try to stop the cutting device with your hands –** Always let it come to a stop by itself.
17. **Inspect electrical cables –** The insulation of the power cord should be perfectly intact. If the power cord is

© 2019 by Snow Joe®, LLC
All rights reserved. Original instructions.

SAVE THESE INSTRUCTIONS

damaged or shows any signs of cracks, do not use the trimmer. Contact your authorized Snow Joe® + Sun Joe® dealer or call the Snow Joe® + Sun Joe® customer service center at 1-866-SNOWJOE (1-866-766-9563).

⚠**CAUTION!** The trimmer line spool will continue to rotate after turning the trimmer OFF. Wait until the trimmer line spool has completely stopped before making contact.

- Only use the same type of line originally provided with the tool.
- Do not use the unit to cut grass that is not in contact with the ground.
- Do not switch the string trimmer + edger ON in enclosed or poorly ventilated spaces or in the presence of flammable and/or explosive substances such as liquids, gases, and powders.
- The user of the trimmer + edger is responsible for any damage sustained by third parties that has been caused by the grass trimmer within the working area.
- Only cut during broad daylight or with adequate artificial light.
- Do not cross roads or gravel paths while the unit is still running.
- When the trimmer + edger is not in use, store it in a dry place and out of the reach of children.
- The trimmer + edger must be operated in a vertical position, perpendicular to the ground.
- Check regularly that all screws are properly secured.

Electrical Safety

1. Ground fault circuit interrupter (GFCI) protection should be provided on the circuit(s) or outlet(s) to be used for this electric grass trimmer. Receptacles are available having built-in GFCI protection and may be used for this measure of safety.
2. Make sure that the mains voltage matches that listed on the unit's rating label. Using the improper voltage can damage the motor and injure the user.
3. To reduce the risk of electric shock, this appliance has a polarized plug (i.e. one blade is wider than the other). Use this appliance only with a polarized UL-, CSA- or ETL-listed extension cord recommended for outdoor, all-weather use.

   The appliance plug will fit into a polarized extension cord only one way. If the appliance plug does not fit fully into the extension cord, reverse the plug. If the plug still does not fit, obtain a correct polarized extension cord. A polarized extension cord will require the use of a polarized wall outlet. The extension cord plug will fit into the polarized wall outlet only one way. If the plug does not fit fully into the wall outlet, reverse the plug. If the plug still does not fit, contact a qualified electrician to install the proper wall outlet. Do not modify the appliance plug, extension cord receptacle, or extension cord plug in any way.
4. To prevent electric shock, use only with an extension cord suitable for outdoor use, such as SW-A, SOW-A, STW-A, STOW-A, SJW-A, SJOW-A, SJTW-A, or SJTOW-A.

   Before use, check that the extension cord is in good condition. When using an extension cord, make sure to use one heavy enough to carry the current your product will draw. An undersized cord will cause a drop in line voltage resulting in loss of power and overheating.

⚠ WARNING ⚠

Electric shock may cause SEVERE INJURY or DEATH. Heed these warnings:

- Do not allow any part of the electric grass trimmer + edger to make contact with water while it is in operation. If the appliance becomes wet while turned off, wipe dry before starting.
- Use only a UL-, CSA- or ETL-rated extension cord for outdoor, all-weather use.
- Do not use an extension cord over 100 ft (30 m).
- Do not touch the appliance or its plug with wet hands or while standing in water. Wearing rubber boots offers some protection.

EXTENSION CORD CHART

Extension Cord Length	Up to 50 ft (15 m)	+50 ft - 100 ft (+15 m - 30 m)
Wire Gauge (A.W.G.):	16	14

5. To prevent the appliance cord from disconnecting from the extension cord during operation, make a knot with the two cords as shown in Table 1.

Table 1. Method of Securing Extension Cord

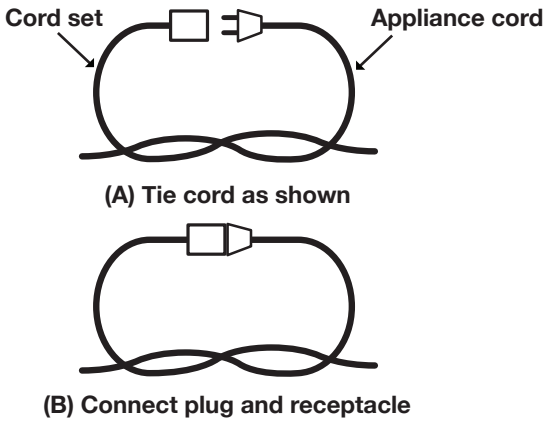

Additional Electrical Safety Rules

- The voltage must correspond to the one marked on the technical data plate (120 V~60 Hz). Do not use other sources of power.
- The power line should have a circuit breaker no lower than 10 A. Consult an electrician if this is not the case.
- Never pass the grass trimmer + edger over the extension cord when the grass trimmer + edger is in use as this could cut the cord. Make sure you know where the cord is at all times.
- Use the special cord restraint hook to connect the extension cord.
- Never use the tool when it is raining or when excessively moist and humid conditions are present. Do not cut damp grass or leave the tool outside overnight.
- The power supply cable should be checked regularly to make sure it is perfectly intact without any signs of wear or damage. If the cable is not in good condition, do not use the unit.
- Only use an extension cable that is rated for outdoor use. Keep the extension cord away from the cutting area, sharp edges, heat, fuels, damp areas, and oily surfaces.
- **Damage to unit –** If the trimmer + edger strikes a foreign object or becomes entangled with it, stop the tool immediately. Unplug it, check for damage, and have any damage repaired before proceeding with operation. Do not operate the tool with a broken hub or spool. Contact your authorized Snow Joe® + Sun Joe® dealer or call the Snow Joe® + Sun Joe® customer service center at 1-866-SNOWJOE (1-866-766-9563).
- **Damage to cord –** Keep power cord away from the rotating line. If you damage the cord, unplug it from the power supply before moving the tool or examining the damage. A damaged cord must be replaced before further use.
- **Do not operate portable electric tools in gaseous or explosive atmospheres –** Motors in these tools normally spark, and the sparks might ignite fumes.
- **Maintain appliances with care –** Follow instructions for lubricating and changing accessories. Inspect extension cords periodically and replace if damaged. Keep handles dry, clean, and free from oil and grease.

Double-Insulated Appliances

In a double-insulated appliance, two systems of insulation are provided instead of grounding. No grounding means is provided on a double-insulated appliance, nor should a means for grounding be added to the appliance. Servicing a double-insulated appliance requires extreme care and knowledge of the system, and should be performed only by qualified service personnel at an authorized Snow Joe® + Sun Joe® dealer. Replacement parts for a double-insulated appliance must be identical to the parts they replace. A double-insulated appliance is marked with the words “Double Insulation” or “Double Insulated.” The symbol ⧈ (square within a square) may also be marked on the appliance.

DOUBLE-INSULATED: GROUNDING NOT REQUIRED. WHEN SERVICING, USE ONLY IDENTICAL REPLACEMENT PARTS.

This electric grass trimmer + edger is double-insulated, eliminating the need for a separate grounding system. Use only identical replacement parts. Read the instructions before servicing double-insulated appliances. Use this grass trimmer + edger only as described in this manual.

Safety Symbols

The following table depicts and describes safety symbols that may appear on this product. Read, understand, and follow all instructions on the machine before attempting to assemble and operate.

Symbols	Descriptions	Symbols	Descriptions
	READ THE OPERATOR'S MANUAL(S) – Read, understand, and follow all instructions in the user manual(s) before attempting to assemble and operate.		Keep bystanders and children a safe distance away.
	SAFETY ALERT – Indicates a precaution, a warning, or a danger.		**WARNING!** Do not expose the unit to rain or wet conditions.
	WEAR EYE AND HEARING PROTECTION – For protection against injury, wear ear defenders and safety goggles.		Beware of flying objects and debris.
	Wear protective gloves when using the machine and handling debris.		**WARNING!** Turn the machine OFF and disconnect it from the power supply before inspecting, cleaning, changing accessories, or conducting any other maintenance task.
	Immediately remove the plug from the mains if the power cable is damaged, frayed, or entangled. Always keep the power cable away from heat, oil and sharp edges.		**DOUBLE INSULATION –** When servicing, use only identical replacement parts.
	DANGER! Beware of thrown objects to bystanders. Keep bystanders at least 15 m (50 ft) away from the machine.		

Know Your Electric Grass Trimmer + Edger

Read the owner's manual and safety instructions carefully before operating the electric grass trimmer + edger. Compare the illustration below to your electric grass trimmer + edger in order to familiarize yourself with the location of the various controls and adjustments. Save this manual for future reference.

1. Rear handle
2. Safety lock button
3. ON/OFF trigger switch
4. Extension cord restraint hook
5. Power plug
6. Adjustable auxiliary handle
7. Handle knob
8. Edging coupler
9. Telescoping locking coupler
10. Telescoping tube
11. Edger guide + flower guard
12. Safety guard
13. Nylon cutting line

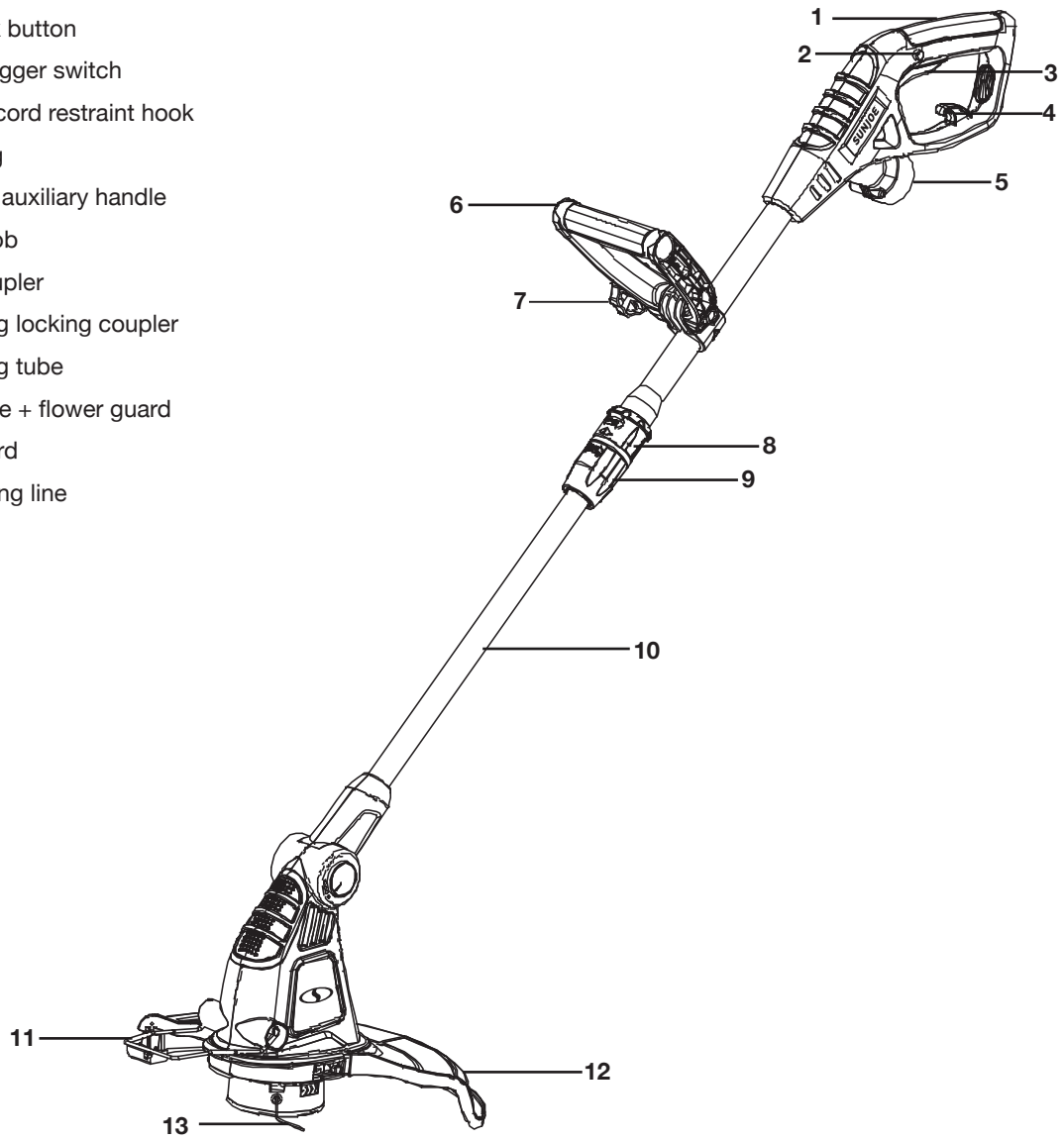

Technical Data

Rated Voltage .....120 V ~ 60 Hz

Motor .....4 amp

Cutting Swath .....13 in. (33 cm)

Spool Length .....16.4 ft (5 m)

Telescopic Pole Length ..... 41 in. - 50 in. (104 cm -127cm)

Multi-Angle Head 0º, 15º, 30º, 45º

No Load Speed ..... 7800 rpm

Spool Advance ..... Auto-feed

Line Diameter ..... 0.063 in. (1.6 mm)

Weight ..... 5.1 lbs. (2.3 kg)

Unpacking

Carton Contents

- Electric grass trimmer + edger
- Safety guard
- Edger guide + flower guard
- Manuals with registration card

1. Carefully remove the electric grass trimmer + edger and check to see that all of the above items are supplied.
2. Inspect the product carefully to make sure no breakage or damage occurred during shipping. If you find damaged or missing parts, DO NOT return the unit to the store. Please call the Snow Joe® + Sun Joe® customer service center at 1-866-SNOWJOE (1-866-766-9563).

   NOTE: Do not discard the shipping carton and packaging material until you are ready to use the electric grass trimmer + edger. The packaging is made of recyclable materials. Properly dispose of these materials in accordance with local regulations or save the packaging for long-term product storage.

IMPORTANT! The equipment and packaging material are not toys. Do not let children play with plastic bags, foils, or small parts. These items can be swallowed and pose a suffocation risk!

Assembly

⚠**WARNING!** Do not connect to power supply until assembly is complete. Failure to comply could result in accidental starting and possible serious personal injury.

Fitting the Safety Guard

⚠**WARNING!** The guard must be properly installed. The guard provides the operator and other bystanders with some protection from thrown objects.

1. Using a screwdriver, remove the small screw that is secured in the small hole in the motor housing (Fig. 1).

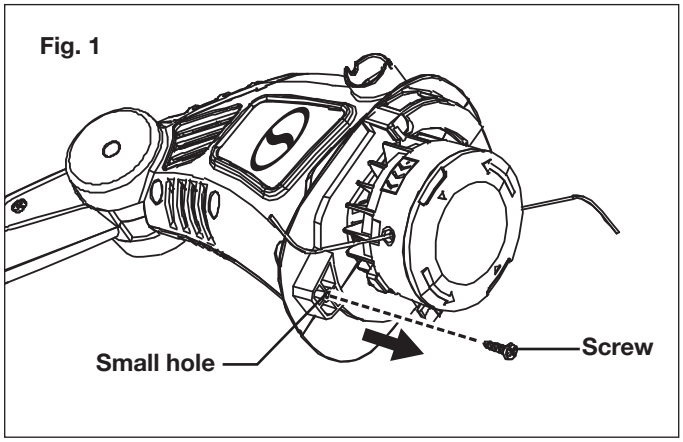

2. Place the safety guard in the direction of the arrow shown to align it with the screw hole in the motor housing (Fig. 2).

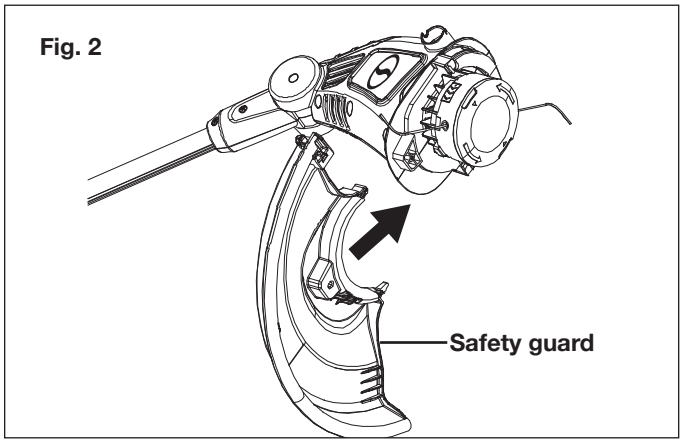

NOTE: Never use the tool unless the safety guard is properly fitted.

3. Firmly press the safety guard into place and secure it to the trimmer head with the screw provided (Fig. 3).

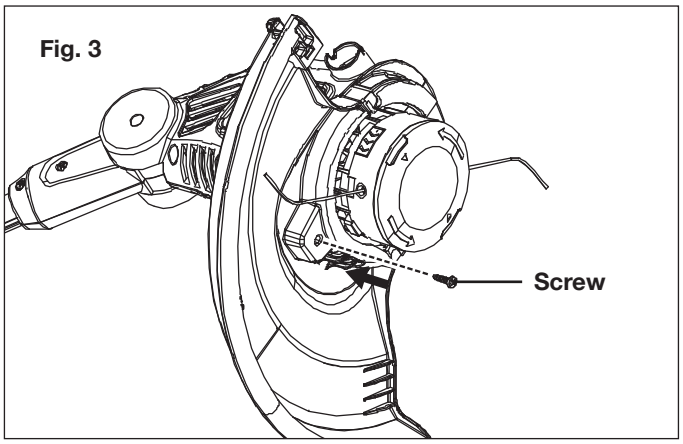

Fitting the Edger Guide + Flower Guard

1. Lightly spread the edger guide + flower guard by hand while approaching the motor housing (Fig. 4).

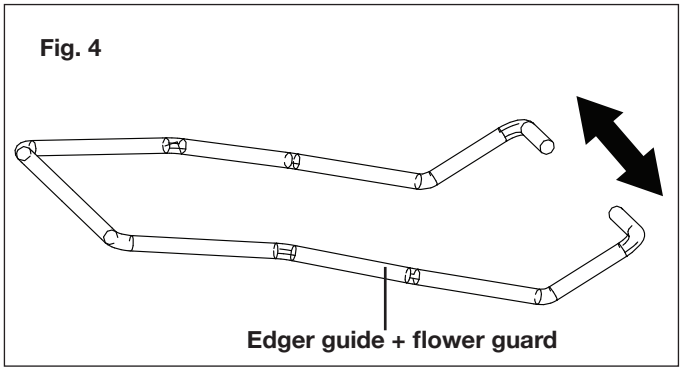

2. While lightly spreading the edger guide + flower guard, fit the curved ends into the small holes on both sides of the motor housing, and release (Figs. 5 & 6).

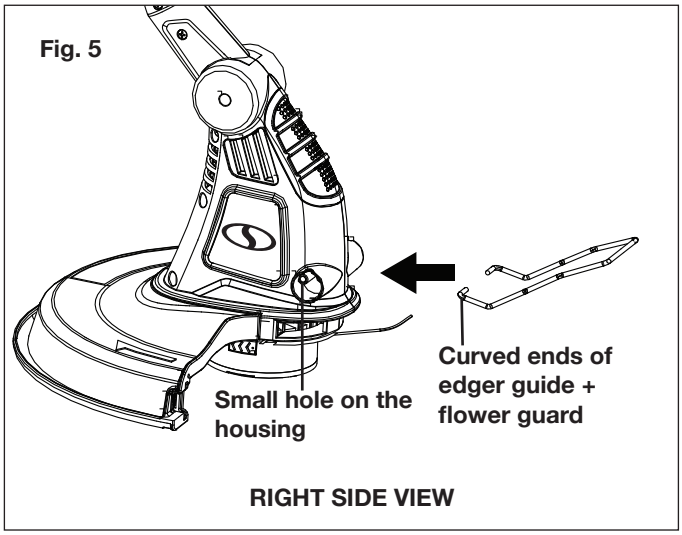

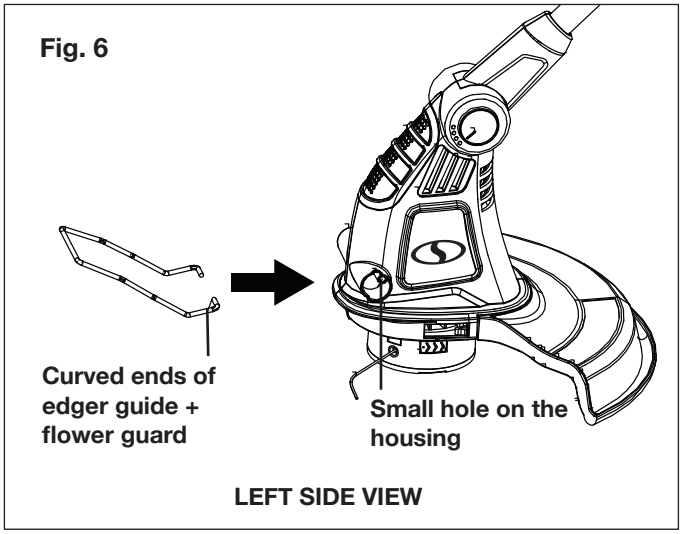

3. The edger guide + flower guard can be flipped up so it stores against the motor housing for convenient storage, when not in use (Fig. 7).

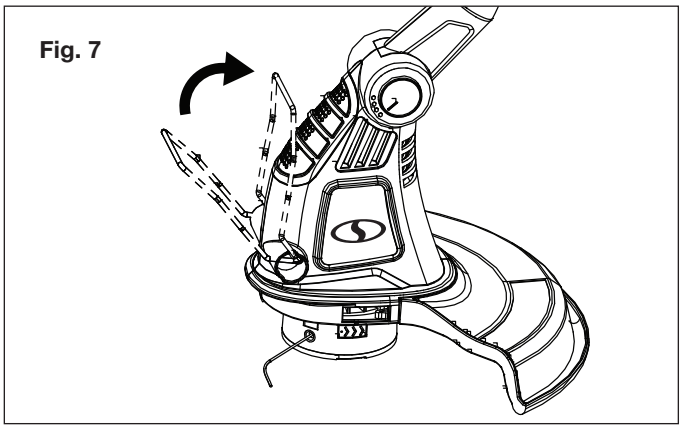

Operation

Auxiliary Handle Adjustment

NOTE: For maximum comfort and control, adjust the auxiliary handle to fit your height. Shorter users adjust the auxiliary handle to a lower position (away from your body). Taller users adjust the auxiliary handle to an upper position (towards to your body). Make sure your forearm is straight when using the machine.

1. Loosen the auxiliary handle by turning the handle knob counterclockwise (Fig. 8).

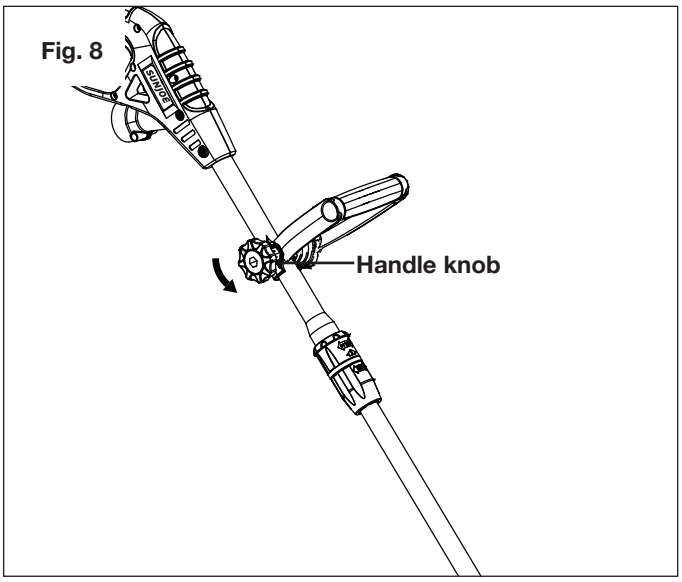

2. Adjust the auxiliary handle to a comfortable working position (Fig. 9).

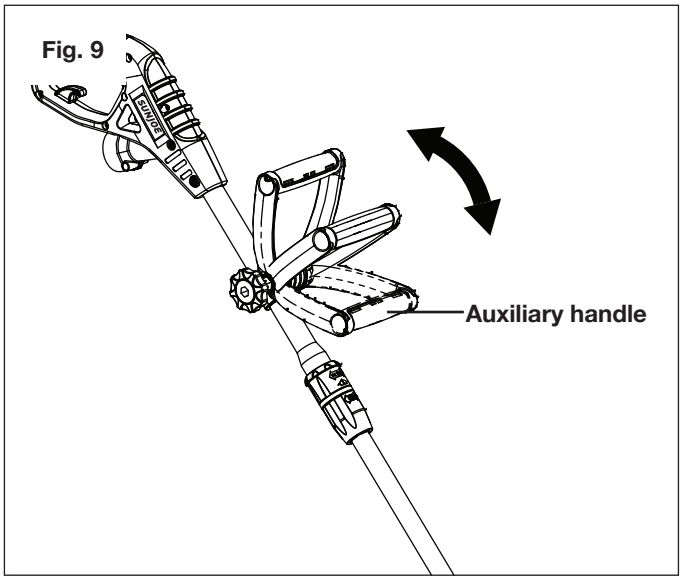

3. Turn the handle knob clockwise to tighten and secure the auxiliary handle in place (Fig. 10).

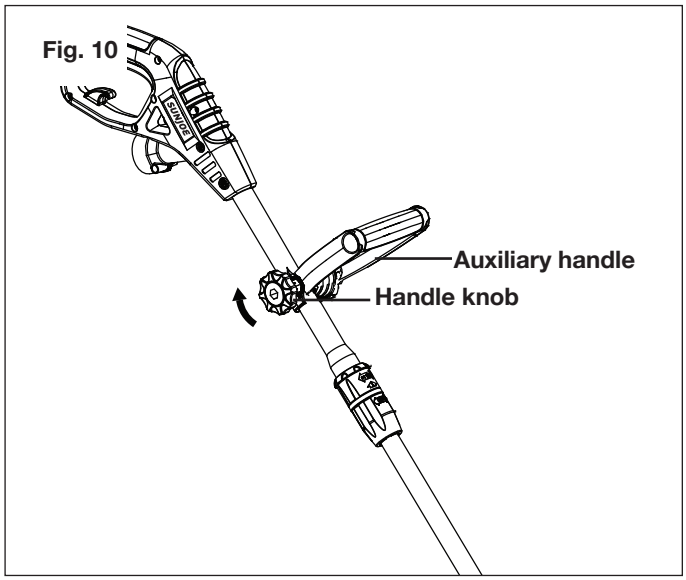

Height Adjustment

The telescoping tube can be extended or shortened for ease of use.

1. Disconnect the grass trimmer + edger from the power supply.
2. Unlock the telescoping tube by turning the telescoping locking coupler clockwise (Fig. 11).

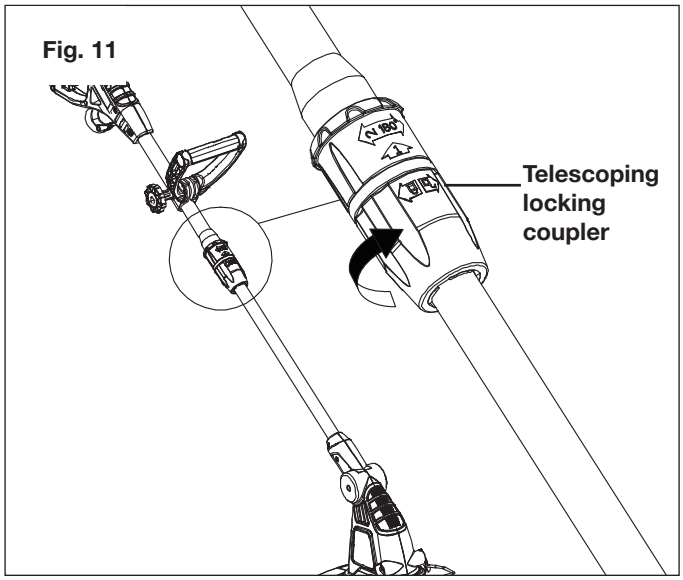

3. Extend the telescoping tube to a comfortable height (Fig. 12).

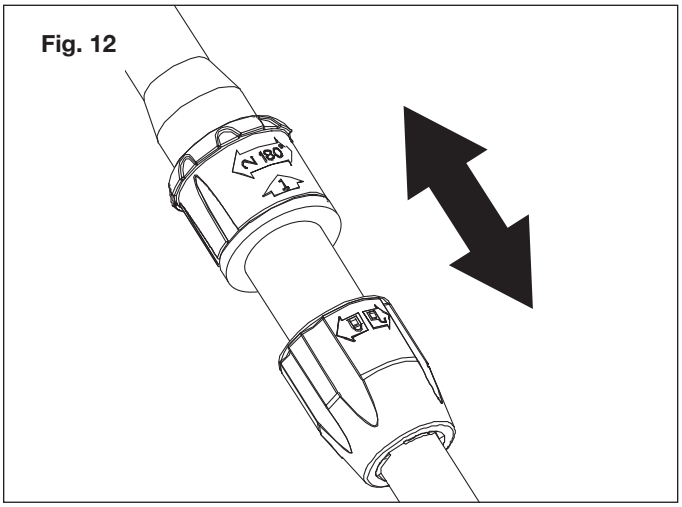

4. Lock the telescoping tube in position by turning the telescoping locking coupler counter-clockwise.

Securing the Extension Cord

1. Make a loop with the extension cord.
2. Insert the loop through the opening in the back of the upper handle and secure the loop onto the extension cord restraint hook (Fig. 13).

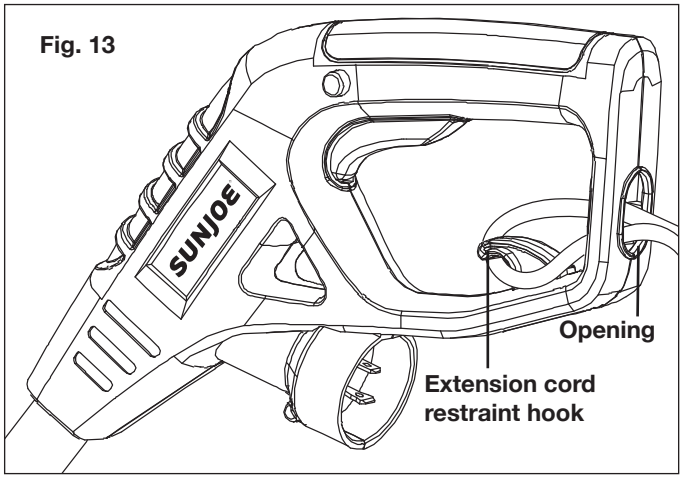

3. Connect the extension cord to the power plug (Fig. 14).

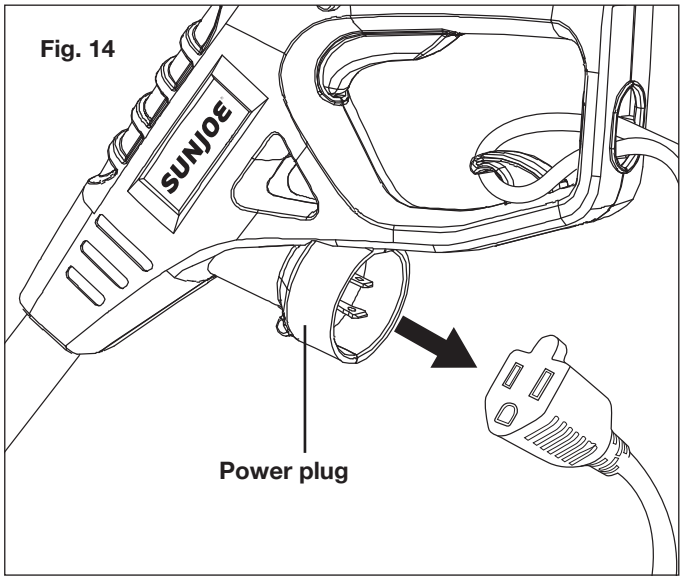

Fig. 14

Starting + Stopping

Before you start the unit, make sure the trimmer is not contacting any object.

1. To turn the grass trimmer + edger ON, press and hold the safety lock button with your thumb, then squeeze the ON/OFF trigger switch with your fingers. Once the machine powers on, you can release the safety button and proceed with operation (Fig. 15).

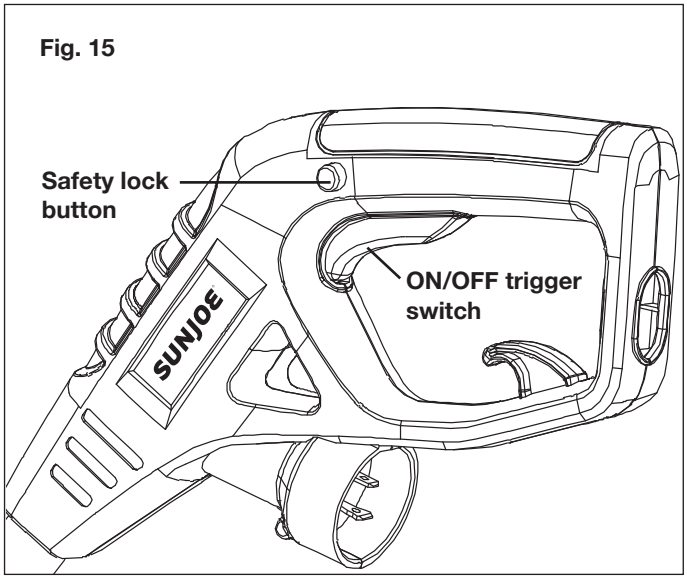

Fig. 15

2. To switch OFF, release the ON/OFF trigger switch (Fig. 15).

Trimming

- Wear non-slip gloves for maximum grip and protection.
- For the best cutting action against walls, fences, and in high grass, move the grass trimmer slowly so grass is cut with the tip of the high speed nylon line.
- Avoid dragging the grass trimmer and string spool hub in contact with the ground.
- Trim only when grass and weeds are dry.

NOTE: As the weather becomes cooler, the tendency for the nylon line to break becomes greater. DO NOT USE WHEN TEMPERATURE IS BELOW 50ºF (10ºC).

- Cut tall grass from top down. This will prevent grass from wrapping around the shaft housing and string head which may cause damage from overheating.
- If grass becomes wrapped around the string head:
  – Stop the trimmer.
  – Unplug the string trimmer.
  – Remove the grass.
- Hold the grass trimmer with your right hand on the rear handle and your left hand on the front auxiliary handle. The trimmer + edger should be held at a comfortable position with the rear handle about hip height.

⚠**WARNING!** Always hold the trimmer away from body. Any contact with the grass trimmer cutting head while operating can result in serious personal injury.

- The life of your nylon line is dependent upon following instructions for proper use, as well as what is being cut, and where the cutting is being done.

⚠**WARNING!** Remove stones, loose pieces of wood, and other objects from the cutting area. The string continues to rotate for a few seconds after switching off the trimmer. Let the motor come to a complete stop before resuming operation. Do not rapidly switch the trimmer off and on.

⚠**CAUTION!** Always wear eye protection.

1. Hold the trimmer at an angle of approximately 10 – 30 degrees to the work area (Fig. 16).

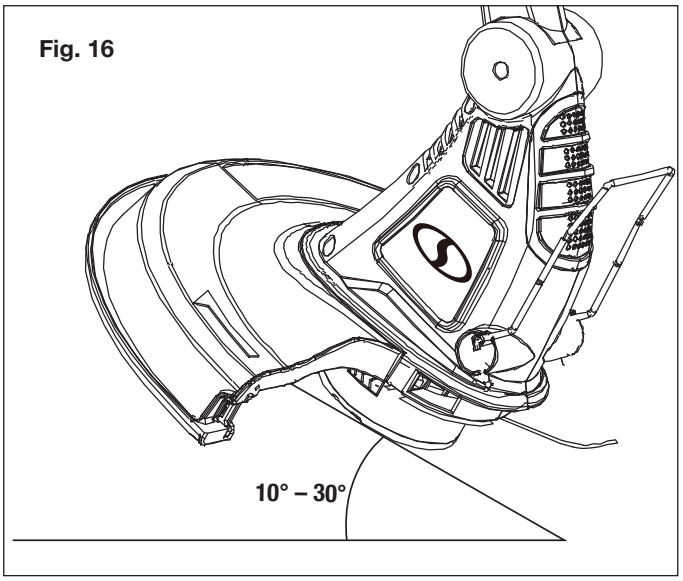

2. Slowly swing the trimmer from side to side (Fig. 17).

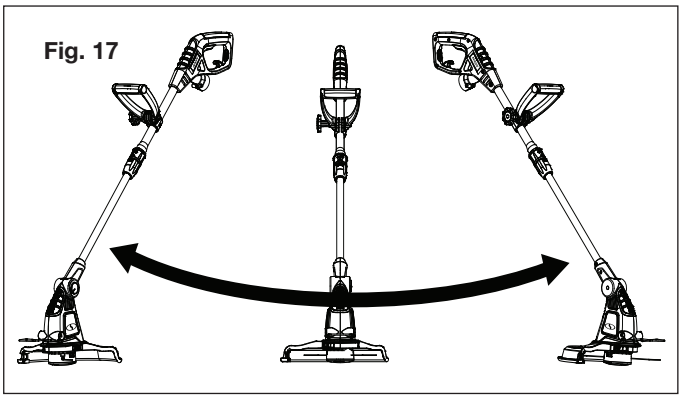

3. Do not overload your trimmer; instead, take small “bites” of grass, working from the top to the bottom. This will keep the machine operating at high speed and will greatly improve its cutting efficiency (Fig. 18).

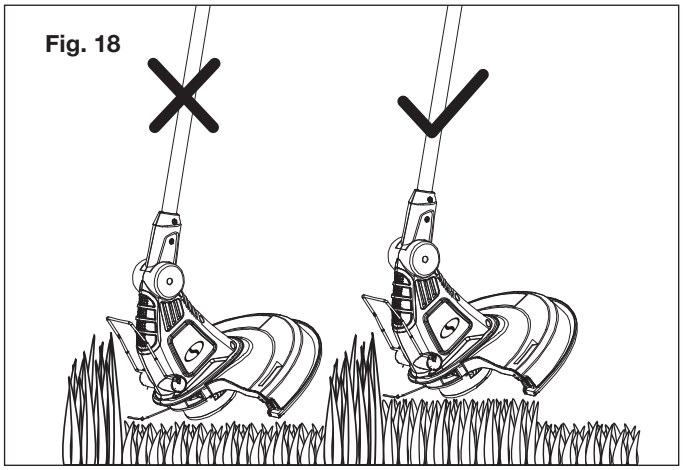

Edging

1. To convert for maintenance edging, turn OFF and unplug the tool.
2. To use the edger guide + flower guard, flip it down from its stored position (Fig. 19).

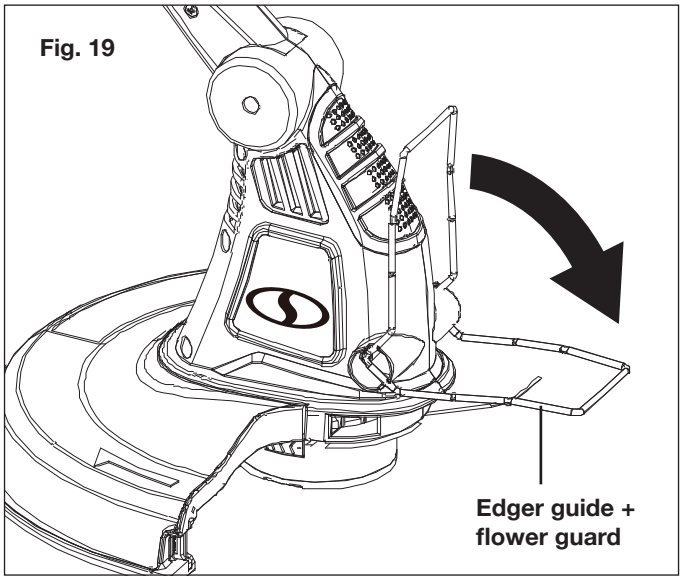

3. Pull up edging coupler and turn the rear handle counterclockwise and release (Fig. 20). The tool is locked in edger mode.

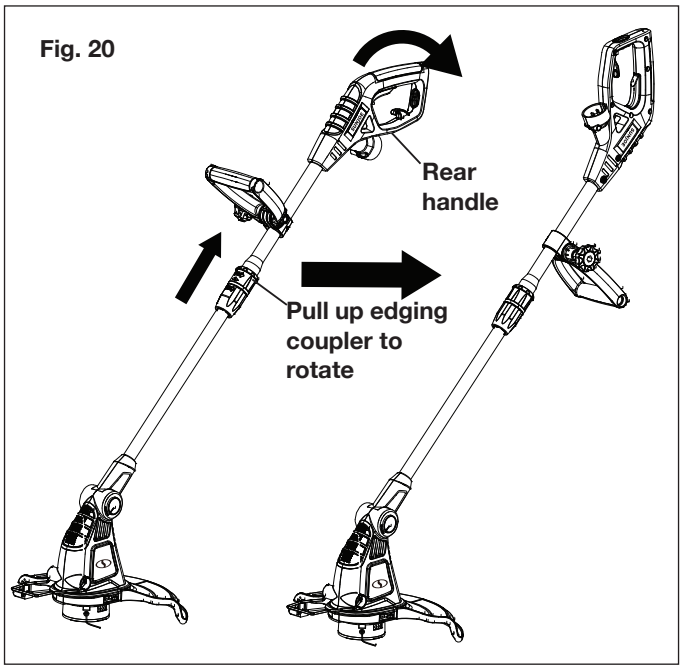

4. Rotate the whole unit 180 degrees. The tool is now ready to be used in edger mode (Fig. 21).

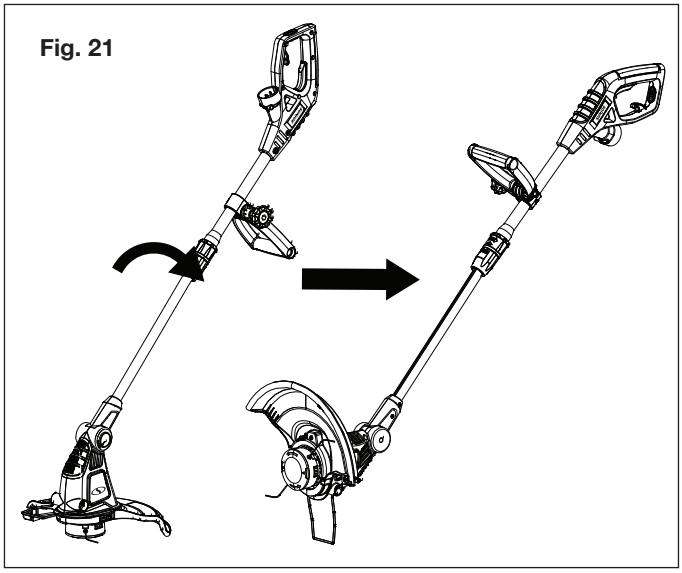
Fig. 21

5. Use the edge of the guard as a guide when cutting near fences and walls (Fig. 22).

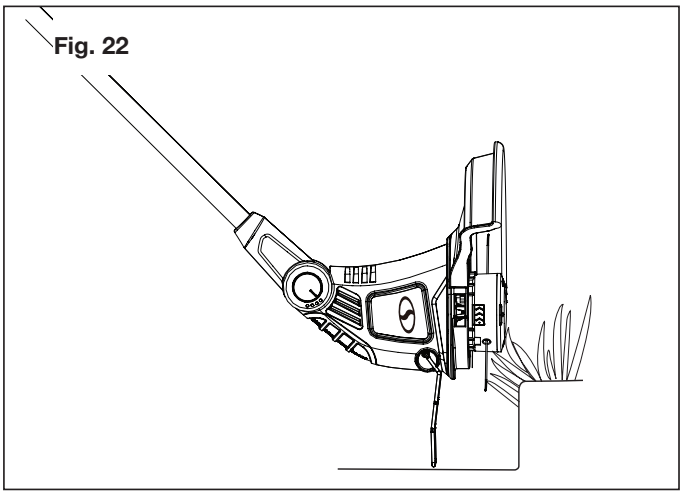
Fig. 22

6. Move the edger in a backwards direction when trimming around edges to avoid damage.

⚠**WARNING!** Do not trim near electrical wires.

Advancing Strings

NOTE: Your trimmer uses 0.063 in. (1.6 mm) diameter nylon line to cut grass and weed quickly and easily. In time, the tip of the nylon line will become worn and the auto-feed mechanism will automatically feed and trim a fresh length of line. The cutting line will wear faster if the cutting is done along sidewalks or other abrasive surfaces or heavier weeds are being cut.

The trimmer + edger is equipped with an auto-feed head. Bumping the head to try to advance the string will damage trimmer.

1. With the unit running, release the ON/OFF switch trigger.
2. Wait two seconds, and press the ON/OFF switch trigger.

NOTE: The strings will extend approximately 1/4 in. with each stop and start of the switch trigger until the strings reach the length of the safety guard.

3. Resume the trimming + edging.

⚠**WARNING!** Do not operate the grass trimmer + edger in a tree, on a ladder, or on a scaffold; this is extremely dangerous.

⚠**WARNING!** Do not bump the unit on ground in attempt to feed line or for any other purpose.

Maintenance

⚠**WARNING!** Make sure to unplug your electric grass trimmer + edger before inspecting its parts.

⚠**WARNING!** Always wear protective gloves during maintenance tasks. Do not carry out maintenance when the motor is running or hot.

- Your trimmer line can dry out over time. To keep your line in top condition, store spare pre-wound spools or bulk line in a plastic resealable bag with a tablespoon of water.
- Never use water or chemical cleaners to clean your grass trimmer + edger. Wipe it clean with a dry cloth.
- Plastic parts may be cleaned by using mild soap and a damp rag.
- Always store your grass trimmer + edger in a dry place. Do not allow any liquid to get inside it.
- Keep the motor ventilation slots clean.
- If you see some sparks flashing in the ventilation slots, this is normal and will not damage your power tool.

IMPORTANT! To ensure product safety and reliability, repairs, maintenance, and adjustments to this power tool should be performed only with identical replacement parts. Contact your authorized Snow Joe® + Sun Joe® dealer or call the Snow Joe® + Sun Joe® customer service center at 1-866-SNOWJOE (1-866-766-9563) for assistance.

Replacing the Spool + Clearing Jams and Tangled Lines

⚠**WARNING!** Unplug the extension cord from the main power plug before changing the trimmer line.

1. Press together both release tabs on the line spool cover and remove the cover by pulling it straight off (Fig. 23).

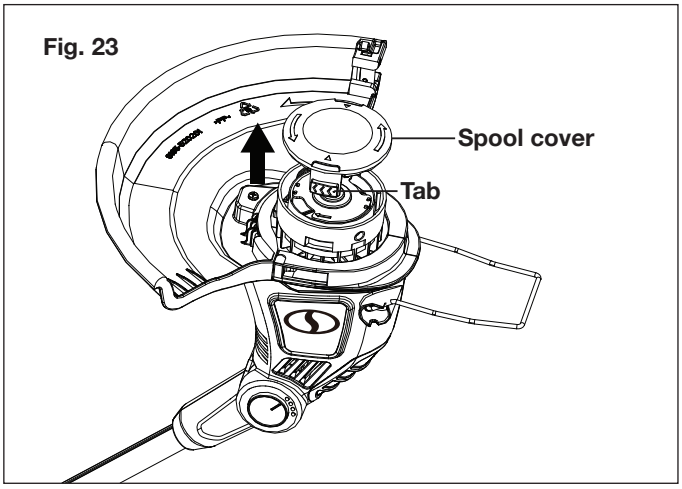

2. Lift and remove the sleeve and spool out of the hub (Fig. 24) and clean out any dirt or grass residue.

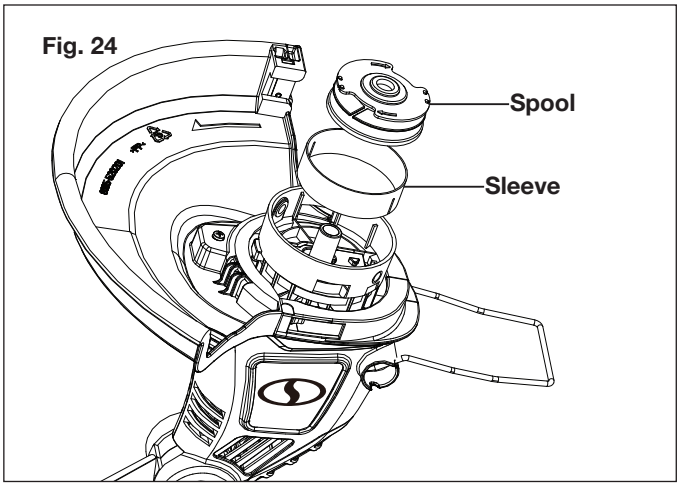

3. In case of jams or tangled line, unwrap about 6 inches (15 cm) of line to ensure that it's not damaged.
4. If it appears undamaged, rewind it and insert each line end through the two slots on each side of the sleeve. Place the sleeve over the spool (Fig. 25).

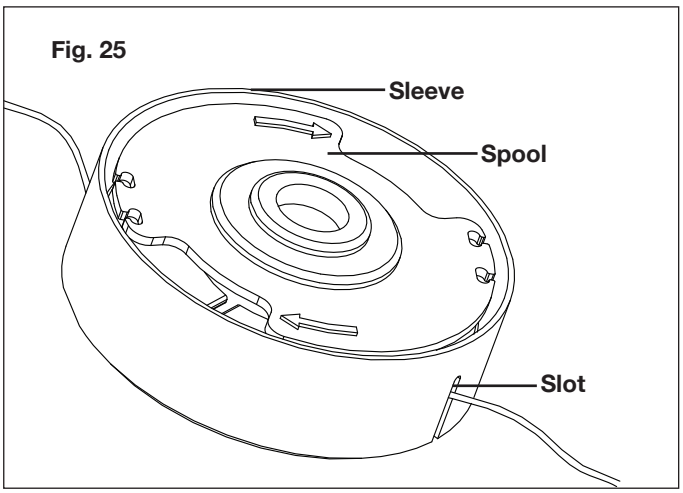

5. Insert each line end through its respective slot on each side of the hub and gently press the spool down (Fig. 26).

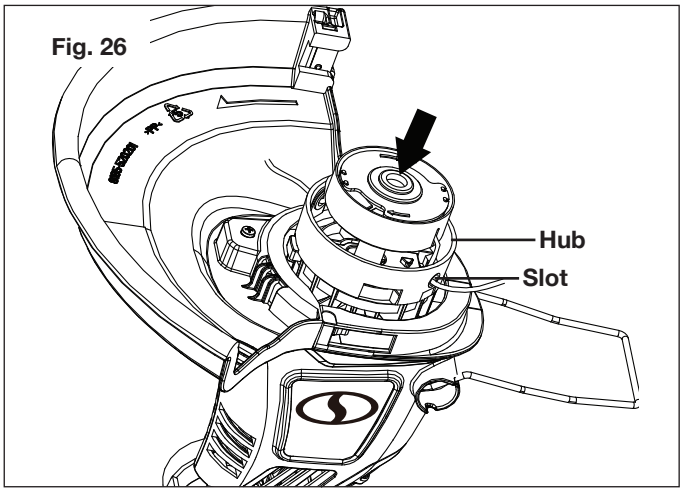

6. Reinstall the spool cover by depressing the release tabs into their slots in the hub, and push down until the spool cover clicks into place.
7. Connect the tool to a power source and turn the tool on. In a few seconds, you will hear the line being cut automatically to the proper length.

Winding the Line

NOTE: A dual-line factory wound spool (model TRJ13STE-RS-6PK) is available for easy spool replacement on the TRJ13STE electric grass trimmer + edger. Visit sunjoe.com to purchase this accessory online. Should you wish to wind the line yourself, the instructions are provided below. Self-winding, however, is **NOT** recommended because if the line is not wound properly it can cause the trimmer's auto feed system to malfunction. For this reason, users are strongly urged to purchase the pre-wound spool.

1. Unplug the grass trimmer.
2. To remove the spool from the trimmer hub, follow steps 1 and 2 from the section "Replacing the Spool + Clearing Jams and Tangled Lines" beginning on page 12.
3. Find the middle of a new piece of 0.063 inch nylon line (up to 16 feet total with 8 feet on both ends), and insert the middle of the line into the groove in the center of the spool (Fig. 27).

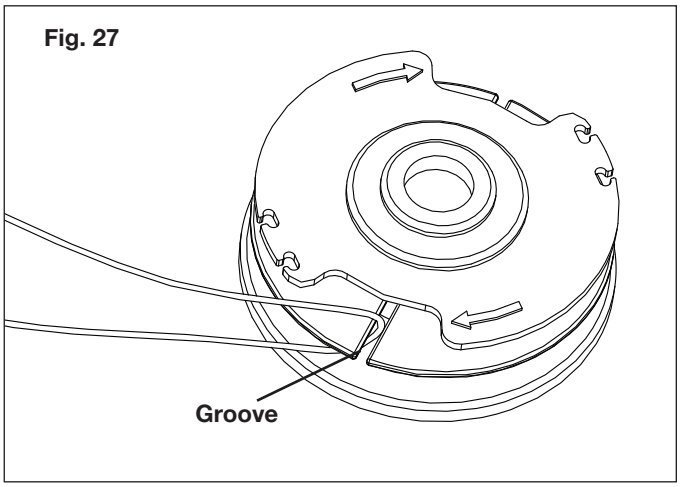

Fig. 27

4. Wind both ends into the grooves using slight tension and following the direction of the arrows (Fig. 28).

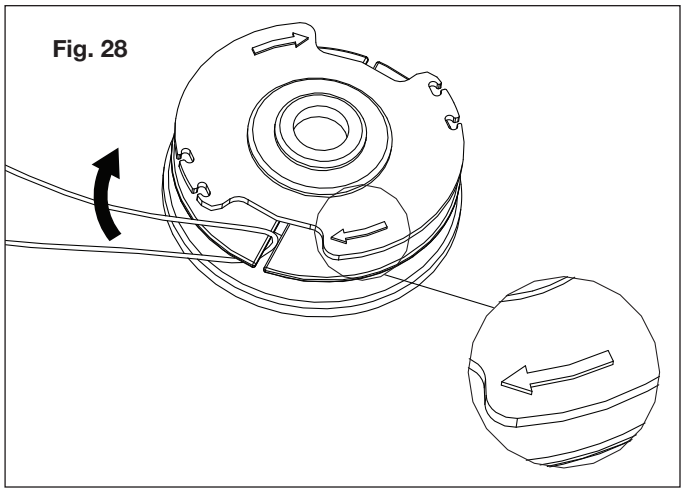
Fig. 28

5. Re-install the spool as instructed in steps 4 to 7 of "Replacing the Spool + Clearing Jams and Tangled Lines".

⚠**CAUTION!** Catapulted pieces of nylon line may cause injury.

NOTE: The maximum recommended length of line in the spool is 16.4 ft (5 m), with 8 ft (2.5 m) per slot.

⚠**WARNING!** Pay attention to the winding direction.

NOTE: Always replace the spool with a new pre-wound spool. Visit sunjoe.com to purchase the pre-wound spool (model TRJ13STE-RS-6PK) for this electric trimmer + edger.

IMPORTANT: Keep all areas of the cutting head and cutting head cover clean. Place the cap back by pushing it firmly onto the cutting head. To ensure that the cutting head cover is correctly fitted, try to remove it without depressing the two latches. If it is correctly fitted, it should not move.

Storage

Follow these recommendations for storing the trimmer.

- Clean the trimmer + edger thoroughly before storing.
- Store the trimmer + edger in a stable and safe position out of the reach of children. Keep the trimmer in a dry place where the temperature is not too hot or too cold.
- When storing the trimmer + edger, do not rest it against the floor. Hang it by the upper handgrip so that the guard does not touch anything. If the guard rests against a surface, its shape and dimensions could be permanently altered, and could render the machine unsafe to use.

Service and Support

If your Sun Joe® TRJ13STE electric grass trimmer + edger requires service or maintenance, please call the Snow Joe® + Sun Joe® customer service center at 1-866-SNOWJOE (1-866-766-9563).

Model and Serial Numbers

When contacting the company, reordering parts, or arranging service from an authorized dealer, you will need to provide the model and serial numbers, which can be found on the decal located on the housing of the unit. Copy these numbers into the space provided below.

Record the following numbers from the housing or handle of your new product:

Model #:

T R J 1 3 S T E

Serial #:

Troubleshooting

Problems	Possible Cause	Possible Solution
The motor does not run or the tool runs slowly.	• Power failure/unit not plugged into a working receptacle. • Spool housing cannot rotate freely. • Cutting line does not protrude.	• Check to make sure the unit is plugged into a working outlet. Make sure the extension cord is not damaged. • Remove the spool and clean the slots; carefully remove any grass and weeds or other debris. • Cut the spool line off so that it just reaches the line trimming blade. • Take the trimmer to an authorized service center if the trimmer does not start after completing these checks.
Auto line feed does not work.	• Trimming blade bound with accumulated grass. • Auto feed out of line. • Spool bound up. • Auto feed is dirty. • Spool line twisted when refilled. • Not enough line is exposed.	• Stop the machine and clean the trimming blade. • Install a new spool of cutting line. • Clean the auto feed. • Remove the spool cover and pull the cutting line until it reaches the trimming blade.
Line fails to cut off.	• Line cutter in guard is covered, damaged, or missing. • Line extends past guard.	• Contact your authorized Snow Joe® + Sun Joe® dealer or call Snow Joe® + Sun Joe® customer service center at 1-866-SNOWJOE (1-866-766-9563). • Rewind or trim line to line cutter.

Optional Accessories

⚠**WARNING!** ALWAYS use only authorized Snow Joe® + Sun Joe® replacement parts and accessories. NEVER use replacement parts or accessories that are not intended for use with this electric grass trimmer + edger. Contact Snow Joe® + Sun Joe® if you are unsure whether it is safe to use a particular replacement part or accessory with your electric grass trimmer + edger. The use of any other attachment or accessory can be dangerous and could cause injury or mechanical damage.

Accessories	Item	Model
1 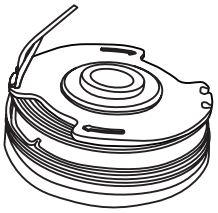	Dual-line pre-wound spool (6-Pack)	TRJ13STE-RS-6PK
2 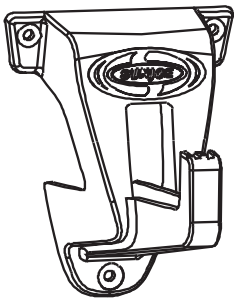	Snow Joe® + Sun Joe® universal wall bracket	SJWB

NOTE: Accessories are subject to change without any obligation on the part of Snow Joe® + Sun Joe® to provide notice of such changes. Accessories can be ordered online at sunjoe.com or via phone by contacting the Snow Joe® + Sun Joe® customer service center at 1-866-SNOWJOE (1-866-766-9563).

NOTES

NOTES

NOTES

SNOW JOE® + SUN JOE® CUSTOMER PROMISE

ABOVE ALL ELSE, Snow Joe® + Sun Joe® are dedicated to you, our customer. We strive to make your experience as pleasant as possible. Unfortunately, there are times when a product does not work or breaks under normal operating conditions. We think it's important that you know what you can expect from us. That's why we created the Snow Joe® + Sun Joe® promise.

OUR PROMISE: Snow Joe® + Sun Joe® warrant new products for two years from the date of purchase. If your product does not work, or there's an issue with a specific part, we will fix this by either sending you a free replacement part or by sending you a new or comparable product at no charge. How cool is that! Before you know it, you'll be back in action cutting, sawing, mowing, washing and…?

PRODUCT REGISTRATION:

Snow Joe®, LLC ("Snow Joe® + Sun Joe®") strongly encourages you to register your purchase. You can register online at **snowjoe.com/ProductRegistration**, or by printing and mailing in a registration card available online from our website, or calling our Customer Service Department at **1-866-SNOWJOE (1-866-766-9563)**, or by e-mailing us at **help@snowjoe.com**. Failure to register your product purchase will not diminish your warranty rights. However, registering your purchase will allow Snow Joe® + Sun Joe® to better serve you with any of your customer service needs.

WHO CAN SEEK WARRANTY COVERAGE?

This Warranty is extended by Snow Joe® + Sun Joe® to the owner of this Machine (a "Machine" consists of a product powered by a motor) for residential and personal household use only. This Warranty does not apply to products used for commercial, rental or re-sale purposes. Should ownership of this machine change during the 2-year period, please update the Machine's owner information at **snowjoe.com/ProductRegistration**.

WHAT IS COVERED?

Snow Joe® + Sun Joe® warrants to the owner that if this Machine fails within 2 years from the date of purchase due to a defect in material or workmanship or as a result of normal wear and tear from ordinary household use, Snow Joe® + Sun Joe® will send a replacement part or product, as needed, free of charge and with free shipping to the original purchaser.

If, in Snow Joe® + Sun Joe®'s sole discretion, the failed Machine cannot be repaired with a part, Snow Joe® + Sun Joe® will elect to either (A) send a new Machine at no charge and with free shipping or (B) refund the full purchase price to the owner.

WHAT IS NOT COVERED?

This Warranty does not apply to the Machines that have been used commercially or in non-household applications. This Warranty does not cover cosmetic changes that do not affect performance. This Warranty is only valid if the Machine is used and maintained in accordance with the instructions, warnings and safeguards contained in the owner's manual. Snow Joe® + Sun Joe® will not be responsible for the cost of any unauthorized warranty repairs. This warranty does not cover any cost or expense incurred by the purchaser in providing substitute equipment or service during reasonable periods of malfunction or non-use of this product while waiting for a replacement part or unit under this warranty.

Wearing parts like belts, augers, chains and tines are not covered under this warranty, and can be purchased at **snowjoe.com** or by calling **1-866-SNOWJOE (1-866-766-9563)**. Batteries are covered in full for 90-days from the date of purchase.

Repair, replacement or refund of the purchase price are the exclusive remedies of purchaser and the sole liability of Snow Joe® + Sun Joe® under this warranty. No employee or representative of Snow Joe® + Sun Joe® is authorized to make any additional warranty or any modification to this warranty which may be binding upon Snow Joe® + Sun Joe®. Accordingly, purchaser should not rely upon any additional statements made by any employee or representative of Snow Joe® + Sun Joe®. In no event, whether based on contract, indemnity, warranty, tort (including negligence), strict liability or otherwise, shall Snow Joe® + Sun Joe® be liable for any special, indirect, incidental, or consequential damages, including, without limitation, loss of profit or revenue.

Some states do not allow limits on warranties. In such states, the above limitations may not apply to you.

Outside the USA, other warranties may apply.

sunjoe.com