SUNJOE®

CORDLESS + ELECTRIC HYBRID LAWN MOWER

16-INCH | 40-VOLT MAX* | 6.5-AMP

OPERATOR'S MANUAL

A Division of Snow Joe®, LLC

Model iON16LM-HYB

Form No. SJ-iON16LM-HYB-880E-MR1

IMPORTANT!

Safety Instructions

All Operators Must Read These Instructions Before Use

Read all the instructions contained in this manual. Keep this manual in a safe place, so that the information is available at all times. If you give the equipment to another person, make sure to provide these operating instructions. Basic safety precautions should always be followed to reduce the risk of fire, electric shock and personal injury.

General Safety Rules

Notice the personal safety alert symbol ⚠ used in this manual to draw your attention to a WARNING given along with the particular operating instruction. This means that the operation requires special ATTENTION, CAUTION and AWARENESS.

1. **Keep the work area clean and well-lit –** Cluttered, dark areas invite accidents.
2. **Keep children, bystanders and pets away –** Always keep children and spectators a safe distance away from the mower during operation and as the machine cools. Children must always be supervised to ensure that they do not play with the equipment.
3. **Dress properly –** Always wear personal safety gear (i.e. safety glasses, rubber gloves, protective non-slip footwear and dust masks) and proper clothing when using the mower. Loose clothing, long hair or jewelry may get caught in the moving parts.
4. **Use the right appliance –** Do not use the lawn mower for any purposes other than those for which it is intended.
5. **Do not force the lawn mower –** It will perform better with less likelihood of personal or mechanical injury if it is used at the rate for which it is designed.
6. **⚠CAUTION: Sharp blades! –** Remove the battery before carrying out any repair work. The blades will continue to rotate after the motor is switched off.
7. **Stay alert –** Always stay alert and watch what you are doing. Use common sense. Do not operate the lawn mower when you are tired or under the influence of alcohol or drugs. This lawn mower is not designed to be used by people (including children) with limited physical, sensory or mental capacities. It should also not be used by those lacking the proper experience and/or knowledge unless they are supervised by a person who is responsible for their safety or they have received instructions from such a person on how to safely use the mower.
8. **Store idle lawn mower indoors –** When not in use, the lawn mower should be stored indoors in a dry, locked place out of the reach of children.
9. **Maintain the lawn mower with care –** Keep cutting edges sharp and clean to maximize your mower's performance and ensure operator safety. Keep handles dry, clean and free from oil and grease.

⚠WARNING! Turn off the power switch, disconnect the battery and/or the power cord before adjusting, inspecting, servicing or cleaning the lawn mower, when changing accessories or when any other dangerous conditions present themselves. All maintenance tasks should be performed after revolving parts inside the lawn mower stop completely. Such preventive safety measures reduce the risk of starting the power tool accidentally.

⚠WARNING! If you notice that the lawn mower is not running properly or unusual vibrations occur from the engine when it is in use, immediately stop the machine and disconnect the battery and/or the power cord. Check the cutters and clear them if necessary. If the machine continues to vibrate, contact an authorized Snow Joe® + Sun Joe® service center at 1-866-SNOWJOE (1-866-766-9563).

10. **Moving parts present risks –** Keep your face, hair, clothing, hands and feet away from all moving parts. All guards and safety attachments must be installed properly before using the unit. Shut off and disconnect the battery and/or the power cord before touching any parts other than the handles and the switch.
11. **Cutting/dismemberment hazard of hand –** Do not touch the blades until the battery and the power cord have been disconnected from the mower and the blades have come to a complete stop.
12. **Avoid unintentional starting –** Make sure the safety switch and the switch bar lever are in the **OFF** position before inserting the battery into the unit. Do not carry the lawn mower with the safety switch and the switch bar lever engaged.
13. **Do not overreach –** Maintain proper footing and balance at all times. Place heels firmly on the ground and tightly grasp the handle bar. Watch for uneven surfaces and do

© 2019 by Snow Joe®, LLC
All rights reserved. Original instructions.

SAVE THESE INSTRUCTIONS

not overreach. In case you fall or collide with the lawn mower, inspect the unit for any damages or cracks. When stepping backwards, be careful to avoid obstacles beneath your feet or behind you to avoid falling.

⚠**WARNING!** If the lawn mower strikes any object, follow these steps:

i) Stop the lawn mower. Remove the battery and/or disconnect the power cord.

ii) Inspect for damage.

iii) Repair any damage before restarting and operating the lawn mower.

IMPORTANT!
Safety Instructions for Walk-Behind Mowers

General Operation

- Read, understand and follow all the safety regulations and instructions on the machine and in the manual before starting.
- Only responsible adults who are thoroughly familiar with the operator controls and the operation of the machine should be allowed to use the mower.
- Make sure that the mowing area is clear of children, pets and other bystanders before starting the machine. Stop the machine if anyone enters the area.
- Do not tip the machine when starting. The machine should be on level ground and you should have a firm grasp on the handle when powering ON.
- Disconnect the power supply (i.e. remove the battery and/or disconnect the power cord):
  - **i)** Whenever you leave the machine unattended;
  - **ii)** Before releasing a blocked cutter;
  - **iii)** Before inspecting, cleaning or performing other maintenance on the machine;
  - **iv)** If a foreign body has been struck;
  - **v)** Whenever the machine starts to vibrate oddly.
- Never mow in the direct vicinity of persons – especially children – or animals.
- Do not operate the machine barefooted or while wearing sandals. Always wear substantial footwear.
- Check the ground on which the equipment will be used and remove all objects that could be picked up and violently flung by the rotary mower blade.
- Before using the mower, visually inspect it to ensure that the blade, mounting bolts and the entire cutting apparatus are in proper working order (i.e. not worn or damaged). To prevent any operating imbalance, replace worn or damaged blades and mounting bolts as a set only (if applicable).

Handling

- Only mow in broad daylight or under well-lit conditions.
- Avoid dangerous environments. Do not use the mower in the rain or on damp/wet grass.
- Always maintain good footing on inclines.
- Only operate the mower at a walking pace.
- Always mow across hills (i.e. never straight up or straight down).
- Be particularly careful when you change direction on a slope.
- Do not mow on overly steep inclines.
- Take extra caution when turning the mower around and when pulling it towards you.
- Switch the mower off, remove the battery and/or disconnect the power cord, wait until the cutters have reached a complete standstill when tipping the mower over, transporting it over surfaces other than grass, and when moving the mower to and from the area you wish to mow.
- Never use the lawn mower if the guards (e.g. side-discharge chute deflectors, grass-catching devices) are damaged or not properly fitted.
- Use the switch lever carefully as described in the manufacturer's instructions. Make sure that your feet are far enough away from the mower blade when starting and using the mower!
- The lawn mower should not be tilted when the motor is switched on unless it has to be raised for starting purposes. In this case, tilt it as little as absolutely necessary and only raise the side opposite to that of the user.
- Do not switch on the mower if you are positioned in front of the discharge chute.
- Never move your hands or feet toward or under any rotating parts. Keep clear of the discharge chute opening at all times.
- Never lift or carry a lawn mower with the engine running.
- Switch off the motor, remove the battery and/or disconnect the power cord and wait for the rotating blades to stop completely: before you dislodge any blockages or clogs in the discharge chute or mower deck; before carrying out any checks, cleaning, maintenance or other work on the lawn mower; and immediately after striking a foreign object. Examine the mower for signs of damage and carry out any necessary repairs before restarting and continuing to work with the mower. If the lawn mower starts to vibrate oddly, immediately switch it off and inspect it.
- Switch off the mower, remove the battery and/or disconnect the power cord whenever you leave the mower.

Maintenance + Storage

- Make sure that all nuts, bolts and screws are tightened securely and that the machine is in safe working condition.
- Allow the mower to cool before you put it into an enclosed area.
- To avoid the risk of fire, keep the motor housing and ventilation slots clear of grass, leaves, oil and grease.
- Routinely check the grass basket for signs of wear and impaired functionality.
- For your own safety, have worn or damaged parts immediately replaced.
- Take care not to jam your fingers between moving blades and stationary parts of the equipment while you are adjusting the equipment.
- While you are carrying out maintenance work on the blades, remember that the blades can still be moved even if the power source has been switched off.

⚠**WARNING!** Some dust and debris created by the use of the tool could contain chemicals known to the State of California to cause cancer and birth defects or other reproductive harm. Some examples of these chemicals are:

- Chemicals in fertilizers
- Compounds in insecticides, herbicides and pesticides
- Arsenic and chromium from chemically treated lumber

Your risk from exposure to these chemicals varies, and depends on how often you do this type of work. To reduce your exposure, work in a well-ventilated area and with approved safety equipment, such as dust masks that are specially designed to filter out microscopic particles.

Electrical Safety

1. Ground fault circuit interrupter (GFCI) protection should be provided on the circuit(s) or outlet(s) to be used for the hybrid lawn mower. Receptacles are available having built-in GFCI protection and may be used for this measure of safety.
2. To prevent electric shock, use only with an extension cord suitable for outdoor use, such as SW-A, SOW-A, STW-A, STOW-A, SJW-A, SJOW-A, SJTW-A, or SJTOW-A.

   Before use, check that the extension cord is in good condition. When using an extension cord, make sure to use one heavy enough to carry the current to the product. An undersized cord will cause a drop in line voltage resulting in loss of power and overheating.
3. To reduce the risk of electric shock, this appliance has a polarized plug (i.e. one blade is wider than the other). Use this appliance only with a polarized UL-, CSA-, or ETL-rated extension cord for outdoor, all-weather use. The appliance plug will fit into a polarized extension cord only one way.

   If the appliance plug does not fit fully into the extension cord, reverse the plug. If the plug still does not fit, obtain a correct polarized extension cord. A polarized extension cord will require the use of a polarized wall outlet. The extension cord plug will fit into the polarized wall outlet only one way. If the plug does not fit fully into the wall outlet, reverse the plug. If the plug still does not fit, contact a qualified electrician to install the proper wall outlet. Do not modify the appliance plug, extension cord receptacle, or extension cord plug in any way.

⚠ WARNING ⚠

Electric shock may cause SEVERE INJURY or DEATH. Heed these warnings:

- Do not allow any part of the hybrid lawn mower to make contact with water while it is in operation. If the appliance becomes wet while turned off, wipe dry before starting.
- Use only a UL-, CSA-, or ETL-rated extension cord for outdoor, all-weather use.
- Do not use an extension cord over 100 ft (30 m).
- Do not touch the appliance or its plug with wet hands or while standing in water. Wearing rubber boots offers some protection.

EXTENSION CORD CHART

Extension Cord Length	Up to 50 ft (15 m)	+50 ft - 100 ft (+15 m - 30 m)
Wire Gauge (A.W.G.):	16	14

4. To prevent the appliance cord from disconnecting from the extension cord during operation, use the on-board cord restraint hook and/or make a knot with the two cords as shown in Table 1.

Table 1. Method of Securing Extension Cord

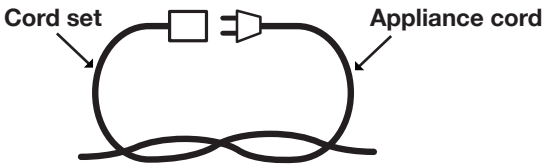

(A) Tie cord as shown

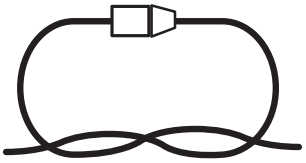

(B) Connect plug and receptacle

5. Do not abuse the cord. Never pull the lawn mower by the cord or yank the cord to disconnect it from the receptacle. Keep the cord away from heat, oil, and sharp edges.
6. Avoid body contact with earthed or grounded surfaces, such as pipes, radiators, ranges and refrigerators. There is an increased risk of electric shock if your body is earthed or grounded.
7. If the supply cord is damaged, it must be replaced by an electrician or a power tool repairer.
8. If operating a power tool in a damp location is unavoidable, use a residual current device (RCD) protected supply. Use of an RCD reduces the risk of electric shock.
9. Have your tool repaired by an electrician or a qualified service center. This power tool complies with relevant safety requirements. To avoid danger, electrical appliances must only be repaired by qualified personnel using original spare parts; otherwise this may result in considerable injury to the user.

Double-Insulated Appliances

In a double-insulated appliance, two systems of insulation are provided instead of grounding. No grounding means is provided on a double-insulated appliance, nor should a means for grounding be added to the appliance. Servicing a double-insulated appliance requires extreme care and knowledge of the system, and should be performed only by qualified service personnel at an authorized Snow Joe® + Sun Joe® dealer. Replacement parts for a double-insulated appliance must be identical to the parts they replace. A double-insulated appliance is marked with the words "Double Insulation" or "Double Insulated." The symbol ⧈ (square within a square) may also be marked on the appliance.



DOUBLE-INSULATED: GROUNDING NOT REQUIRED. WHEN SERVICING, USE ONLY IDENTICAL REPLACEMENT PARTS.

This hybrid lawn mower is double-insulated, eliminating the need for a separate grounding system. Use only identical replacement parts. Read the instructions before servicing double-insulated appliances. Use this hybrid lawn mower only as described in this manual.

Battery + Charger Safety Instructions

We pay a great deal of attention to the design of every battery pack to ensure that we supply you with batteries that are safe, durable and have a high energy density. The battery cells have a wide range of safety devices. Each individual cell is initially formatted and its electrical characteristic curves are recorded. This information is then used to manufacture the best possible battery packs.

Despite all the safety precautions, caution must always be exercised when handling batteries. The following points must be obeyed at all times to ensure safe use. Safe use can only be guaranteed if undamaged cells are used. Incorrect handling of the battery pack can cause cell damage.

IMPORTANT! Analyses confirm that incorrect use and poor care of high-performance batteries are the main factors responsible for personal and/or product damage.

⚠**WARNING!** Use only approved replacement batteries; other batteries may damage the lawn mower and cause it to malfunction, which can lead to serious personal injury.

⚠**CAUTION!** To reduce the risk of injury, charge the 40V iONMAX lithium-ion battery pack only in its designated 40V iONMAX lithium-ion charger. Other types of chargers present risk of fire, personal injury and damage. Do not wire a battery pack to a power supply plug or car cigarette lighter. Such misuse will permanently disable or damage the battery pack.

- **Avoid dangerous environments –** Do not charge the battery pack in rain, snow or in damp or wet locations. Do not use the battery pack or charger in the presence of explosive atmospheres (gaseous fumes, dust or flammable materials) because sparks may be generated when inserting or removing the battery pack, which could lead to a fire.
- **Charge in a well-ventilated area –** Do not block the charger vents. Keep them clear to allow for proper ventilation. Do not allow smoking or open flames near a charging battery pack. Vented gases may explode.

  NOTE: The safe temperature range for the battery is -4°F – 113°F (-20°C – 45°C). Do not charge the battery outside in freezing weather; charge it at room temperature.
- **Maintain charger cord –** When unplugging the charger, pull the plug, not the cord, from the receptacle to reduce the risk of damage to the electrical plug and cord. Never carry the charger by its cord or yank it by the cord to disconnect it from the receptacle. Keep the cord away from heat, oil and sharp edges. Make sure the cord will not be stepped on, tripped over or subjected to damage or stress when the charger is in use. Do not use the charger with a damaged cord or plug. Replace a damaged charger immediately.
- **Do not use an extension cord unless it is absolutely necessary –** Using the wrong, damaged or improperly wired extension cord poses a risk of fire and electric shock. If an extension cord must be used, plug the charger into a properly wired 16 gauge or larger extension cord with blades that are the same number, size and shape as the blades on the charger. Make sure that the extension cord is in good electrical condition.
- **Charger iCHRG40 is rated for 120 volt AC only –** The charger must be plugged into an appropriate receptacle.
- **Use only recommended attachments –** Use of an attachment not recommended or sold by the battery charger or battery pack manufacturer may result in risk of fire, electric shock or personal injury.

- **Unplug charger when not in use –** Make sure to remove battery packs from unplugged chargers.

⚠**WARNING!** To reduce the risk of electric shock, always unplug the charger before performing any cleaning or maintenance. Do not allow water to flow into the AC/DC plug. Use a Ground Fault Circuit Interrupter (GFCI) to reduce shock hazards.

- **Do not burn or incinerate battery packs –** Battery packs may explode, causing personal injury or damage. Toxic fumes and materials are created when battery packs are burned.
- **Do not crush, drop or damage battery packs –** Do not use the battery pack or charger if they have sustained a sharp blow, been dropped, run over or have been damaged in any way (e.g. pierced with a nail, hit with a hammer, stepped on, etc.).
- **Do not disassemble –** Incorrect reassembly may pose a serious risk of electric shock, fire or exposure to toxic battery chemicals. If the battery or charger are damaged, contact your Snow Joe® + Sun Joe® dealer or Snow Joe® + Sun Joe® customer service center at 1-866-SNOWJOE (1-866-766-9563).
- **Battery chemicals cause serious burns –** Never let a damaged battery pack contact the skin, eyes or mouth. If a damaged battery pack leaks battery chemicals, use rubber or neoprene gloves to safely dispose of it. If skin is exposed to battery fluids, wash the affected area with soap and water and rinse with vinegar. If eyes are exposed to battery chemicals, immediately flush with water for 20 minutes and seek medical attention. Remove and dispose of contaminated clothing.
- **Do not short circuit –** A battery pack will short circuit if a metal object makes a connection between the positive and negative contacts on the battery pack. Do not place a battery pack near anything that may cause a short circuit, such as paper clips, coins, keys, screws, nails and other metallic objects. A short-circuited battery pack poses a risk of fire and severe personal injury.
- **Store your battery pack and charger in a cool, dry place –** Do not store the battery pack or charger where temperatures may exceed 104ºF (40ºC), such as in direct sunlight or inside a vehicle or metal building during the summer.

Information about the battery

1. The battery pack supplied with your hybrid lawn mower is not charged. The battery pack has to be charged before you use the tool for the first time.
2. For optimum battery performance avoid low discharge cycles. Charge the battery pack frequently.
3. Store the battery pack in a cool place, ideally at 59°F (15°C) and charged to at least 40%.
4. Lithium-ion batteries are subject to a natural aging process. The battery pack must be replaced at the latest when its capacity falls to just 80% of its capacity when new. Weakened cells in an aged battery pack are no longer capable of meeting the high power requirements needed for the proper operation of your lawn mower, and therefore pose a safety risk.
5. Do not throw battery packs into an open fire. There is a risk of explosion!
6. Do not ignite the battery pack or expose it to fire.
7. Do not exhaustively discharge batteries. Exhaustive discharge will damage the battery cells. The most common cause of exhaustive discharge is lengthy storage or non-use of partially discharged batteries. Stop working as soon as the performance of the battery falls noticeably or the electronic protection system triggers. Place the battery pack in storage only after it has been fully charged.
8. Protect batteries and the tool from overloads. Overloads will quickly result in overheating and cell damage inside the battery housing even if this overheating is not apparent externally.
9. Avoid damage and shocks. Immediately replace batteries that have been dropped from a height of more than one meter or those that have been exposed to violent shocks, even if the housing of the battery pack appears to be undamaged. The battery cells inside the battery may have suffered serious damage. In such instances, please read the waste disposal information for proper battery disposal.
10. If the battery pack suffers overloading and overheating, the integrated protective cutoff will switch off the equipment for safety reasons.

    IMPORTANT! Do not press the ON/OFF switch any more if the protective cut-off has been activated. This may damage the battery pack.
11. Use only original battery packs. The use of other batteries poses a fire risk and may result in injuries or an explosion.

Information about the charger and the charging process

1. Please check the data marked on the rating plate of the battery charger. Be sure to connect the battery charger to a power supply with the voltage marked on the rating plate. Never connect it to a different mains voltage.
2. Protect the battery charger and its cord from damage. Keep the charger and its cord away from heat, oil and sharp edges. Have damaged cords repaired without delay by a qualified technician at an authorized Snow Joe® + Sun Joe® service center at 1-866-SNOWJOE (1-866-766-9563).
3. Electrical plugs must match the outlet. Never modify the plug in any way. Do not use any adapter plugs with grounded appliances. Unmodified plugs and matching outlets will reduce the risk of electric shock.
4. Keep the battery charger, any batteries, and the hybrid tool out of the reach of children.
5. Do not use the supplied battery charger to charge other cordless tools.
6. During periods of heavy use, the battery pack will become warm. Allow the battery pack to cool to room temperature before inserting it into the charger to recharge.
7. Do not over-charge batteries. Do not exceed the maximum charging times. These charging times only apply to discharged batteries. Frequent insertion of a charged or partially charged battery pack will result in over-charging and cell damage. Do not leave batteries in the charger for days on end.
8. Never use or charge batteries if you suspect that it has been more than 12 months since the last time they were charged. There is a high probability that the battery pack has already suffered dangerous damage (exhaustive discharge).
9. Charging batteries at a temperature below 50°F (10°C) will cause chemical damage to the cells and may cause a fire.
10. Do not use batteries that have been exposed to heat during the charging process, as the battery cells may have suffered dangerous damage.
11. Do not use batteries that have suffered curvature or deformation during the charging process or those that exhibit other atypical symptoms (gassing, hissing, cracking, etc.).
12. Never fully discharge the battery pack (maximum recommended depth of discharge is 80%) A complete discharge of the battery pack will lead to premature aging of the battery cells.

Protection from environmental influences

1. Wear suitable work clothes. Wear safety goggles.
2. Protect your hybrid tool and the battery charger from moisture and rain. Moisture and rain can cause dangerous cell damage.
3. Do not use the hybrid tool or the battery charger near vapors and flammable liquids.
4. Use the battery charger and hybrid tools only in dry conditions and at an ambient temperature of 50°F – 104°F (10°C – 40°C).
5. Do not keep the battery charger in places where the temperature is liable to reach over 104°F (40°C). In particular, do not leave the battery charger in a car that is parked in the sunshine.
6. Protect batteries from overheating. Overloads, over-charging and exposure to direct sunlight will result in overheating and cell damage. Never charge or work with batteries that have been overheated – replace them immediately, if possible.
7. Store the charger and your hybrid tool only in dry locations with an ambient temperature of 50°F – 104°F (10°C – 40°C). Store your lithium-ion battery pack in a cool, dry place at a temperature of 50°F – 68°F (10°C – 20°C). Protect the battery pack, charger and hybrid tool from humidity and direct sunlight. Only place fully charged batteries in storage (charged to at least 40%).
8. Prevent the lithium-ion battery pack from freezing. Battery packs that were stored below 32°F (0°C) for more than 60 minutes must be discarded.
9. When handling batteries, be wary of electrostatic charge. Electrostatic discharges can damage the electronic protection system and the battery cells. Avoid electrostatic charging and never touch the battery poles.

Safety Symbols

The following table depicts and describes safety symbols that may appear on this product. Read, understand and follow all instructions on the machine before attempting to assemble and operate.

Symbols	Descriptions	Symbols	Descriptions
	**WARNING!** To reduce the risk of injury, user must read instruction manual.		**WARNING!** Do not expose the unit to rain or wet conditions. Keep dry.
	Safety alert. Caution.		Keep bystanders and children a safe distance away.
	Wear eye and hearing protection. For protection against injury, wear ear defenders and safety goggles.		Severing of toes or fingers by rotary mower blade.
	Cutting/dismemberment hazard of hand. Keep hands away from the rotating blade.		Slip on slope hazard – Use extra caution when mowing on slopes to prevent slip and fall accidents.
	**WARNING!** Always turn the machine OFF and remove the safety key before conducting inspection, cleaning and maintenance.		**CAUTION!** Objects picked up and thrown by the rotating blade can cause severe injury.
	The rotating part will continuously run for several seconds after you turn off the machine.		Indoor use only. Only use battery charger indoors.
	Looking behind while backing.	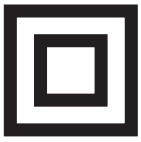	Double Insulation.

Know Your Hybrid Lawn Mower

Read the owner's manual and safety rules carefully before operating the lawn mower. Compare the illustration below to the actual unit in order to familiarize yourself with the location of the various controls and adjustments. Save this manual for future reference.

1. Switch bar lever
2. AC safety lock button
3. Extension cord restraint holder
4. Switch box
5. DC safety lock button
6. Upper handle
7. Appliance cord
8. Lower handle
9. Upper handle knobs and bolts (2)
10. Grass indicator window
11. AC slot
12. DC slot
13. Safety key
14. Slot cover
15. Battery cover
16. Battery compartment
17. Battery cover locking button
18. Front wheel (2)
19. Mower body
20. Rear wheel (2)
21. Cutting height adjustment lever
22. Multi-position height adjustment quick lock wheel (2)
23. Grass collection bag
24. Ejector flap
25. Push button for battery indicator
26. Battery indicator
27. Push lock button
28. iONMAX iBAT40 lithium-ion battery featuring exclusive EcoSharp® technology
29. iONMAX iCHRG40 lithium-ion battery charger

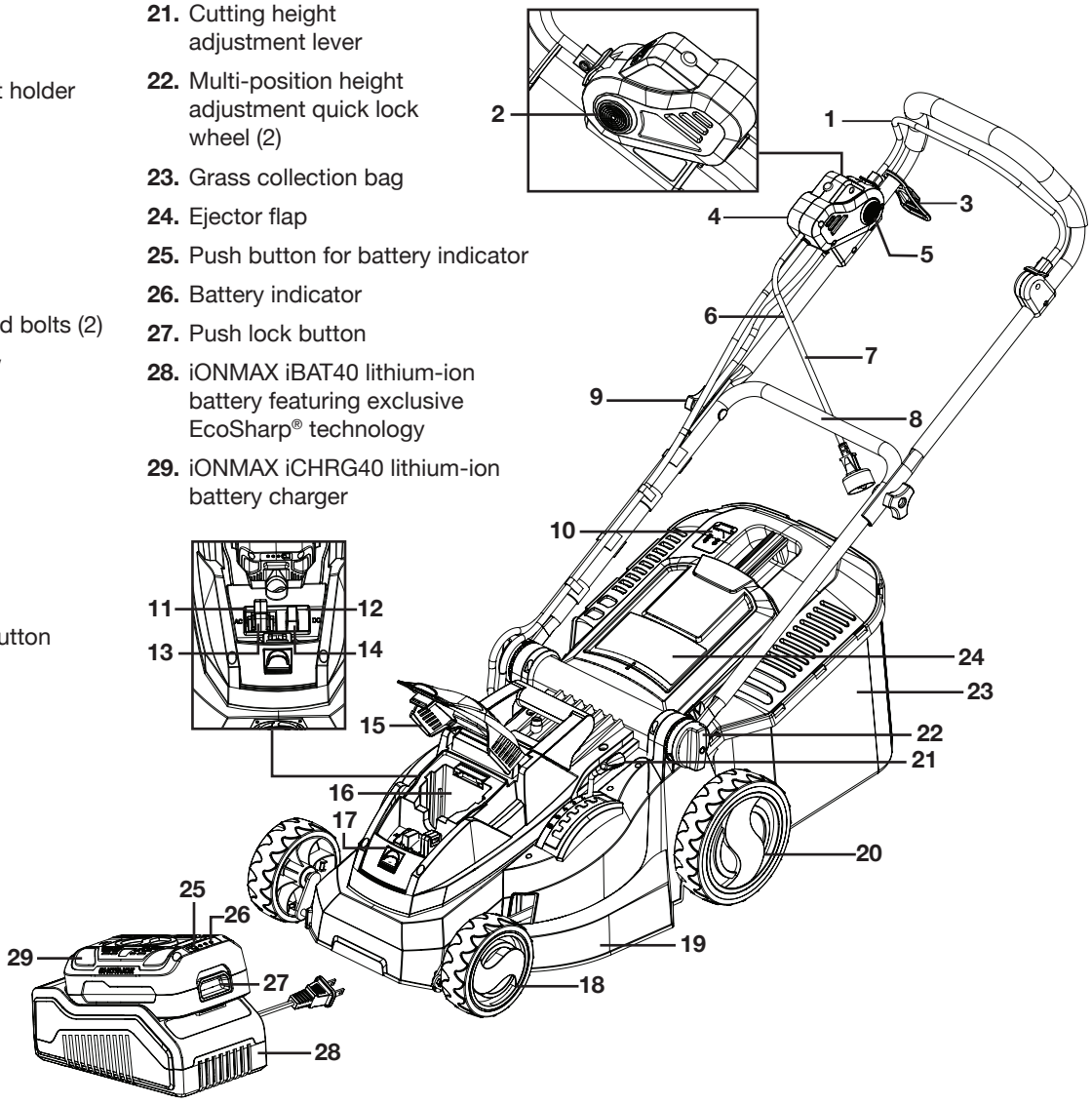

Technical Data

Rated Voltage	120 V ~ 60 Hz (6.5 A)
Battery Voltage*	40 V D.C.
Battery Capacity	4.0 Ah
Battery Charge Time Max	3 hours
Battery Run Time Max	25 min
No Load Speed	AC: 3800 rpm DC: 2900 rpm
Cutting Width Max	15 in. (38 cm)
Deck Size	16 in. (41 cm)
Motor	780 W magnet motor
Cutting Height	1.18 in. to 3.15 in. (30 mm to 80 mm)
Grass Bag Capacity	9.25 gal (35 l)
Wheel Size	6 in. (15.2 cm) front 8 in. (20.3 cm) rear
Weight (Mower Alone)	39.7 lbs (18 kg)
Weight (Mower With Battery Installed)	42 lbs (19.1 kg)

**Initial no-load voltage, when fully charged, peaks at 40 volts; nominal voltage under typical load is 36 volts.*

Unpacking

Carton Contents

- Lawn mower body
- Upper handle
- Lower handle
- iONMAX 40 V 4.0 Ah lithium-ion battery
- iONMAX 40 V lithium-ion battery charger
- Grass bag
- Upper handle knob and bolt (2)
- Multi-position height adjustment quick lock wheel (2)
- Manuals and registration card

1. Carefully remove the lawn mower and check to see that all of the above items are supplied.
2. Inspect the product carefully to make sure no breakage or damage occurred during shipping. If you find damaged or missing parts, DO NOT return the unit to the store. Please call the Snow Joe® + Sun Joe® customer service department at 1-866-SNOWJOE (1-866-766-9563).

   NOTE: Do not discard the shipping carton and packaging material until you are ready to use your new hybrid lawn mower. The packaging is made of recyclable materials. Properly dispose of these materials in accordance with local regulations.

IMPORTANT! The equipment and packaging material are not toys. Do not let children play with plastic bags, foils or small parts. These items can be swallowed and pose a suffocation risk!

Intended Use

Carefully follow the instructions below to assemble your iONMAX hybrid lawn mower.

The equipment may only be used for the tasks it is designed to handle. Any other use is deemed to be a case of misuse. The user/operator, not the manufacturer, will be liable for any damage or injuries of any kind resulting from such misuse of the mower.

The lawn mower is intended for private residential use (i.e. for use in home and gardening environments). Private use of the lawn mower refers to an annual operating time generally not exceeding 50 hours, during which the machine is primarily used to maintain small-scale, residential lawns and home/hobby gardens. Public facilities, sporting halls and agricultural/forestry applications are excluded. Please note that this equipment has not been designed for commercial, trade or industrial applications. The warranty will be voided if the machine is used in commercial, trade or industrial businesses or for equivalent purposes.

Keep these instructions and refer to them prior to each mowing session in order to ensure that the lawn mower is properly used and maintained. The instructions contain valuable information on operating, maintenance and servicing.

IMPORTANT! Due to the high risk of bodily injury to the user, the lawn mower may not be used to trim bushes, hedges or shrubs, to cut scaling vegetation, planted roofs, or balcony-grown grass, to clean (suck up) dirt and debris off walkways, or to chop up tree or hedge clippings. Moreover, the lawn mower may not be used as a power cultivator to level out high areas such as molehills.

For safety reasons, the lawn mower may not be used as a drive unit for other work tools or toolkits of any kind.

Reduce Noise Generation And Keep Vibration To A Minimum!

- Use only equipment that is in perfect condition.
- Maintain and clean the equipment regularly.
- Adjust your work rate to the equipment's performance.
- Do not overload the equipment.
- Have the equipment checked if necessary.
- Switch off the equipment when not in use.
- Wear gloves.

Assembly

Fitting the Upper + Lower Handles

1. To assemble the lower handle, fit the end of the lower handle in the threaded end of the mower body (Fig. 1).

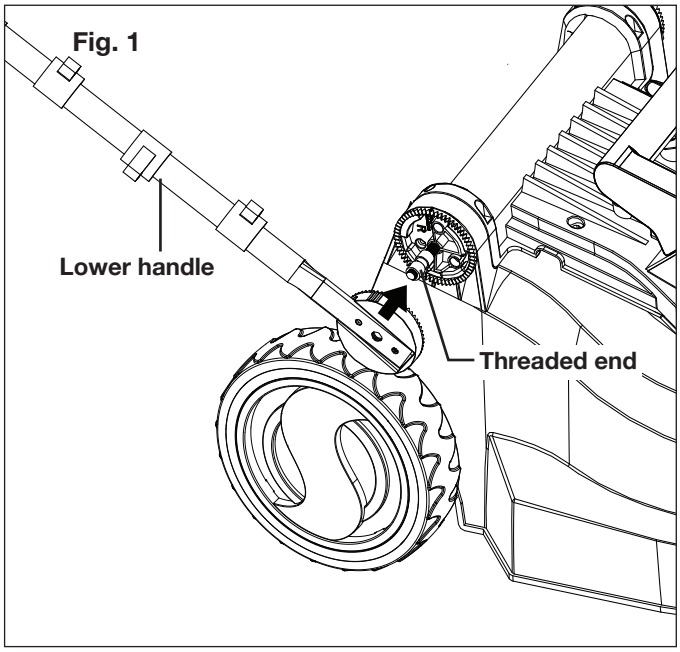

2. Cover the lower handle ends with the multi-position height adjustment quick lock wheels, and turn the wheels clockwise to tighten (Figs. 2 – 3).

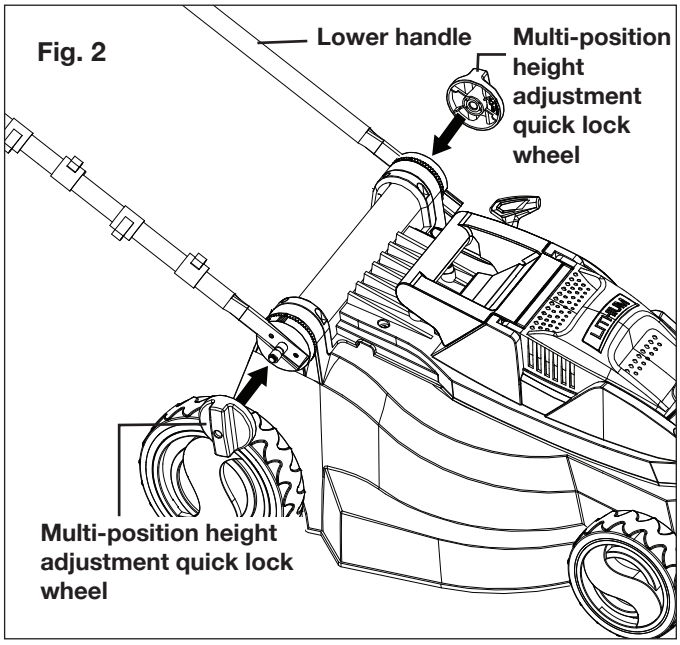

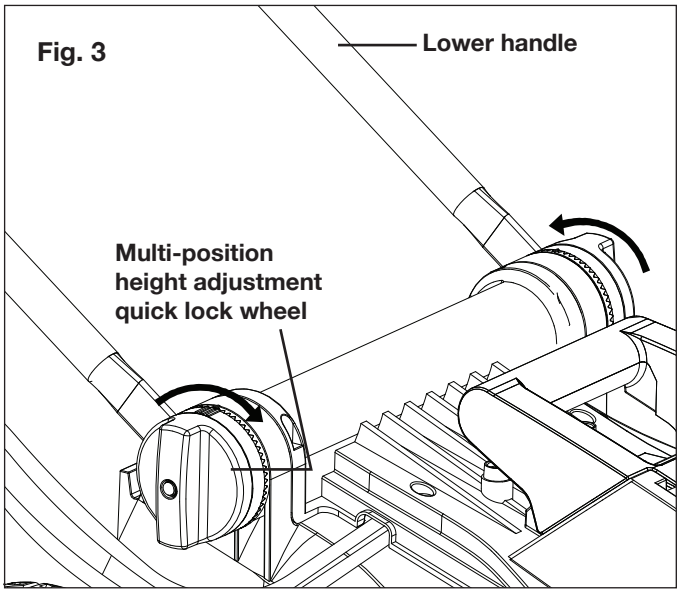

3. Align the upper handle end with the holes of the lower handle, and use the two set of upper handle knob and bolt to secure (Fig. 4).

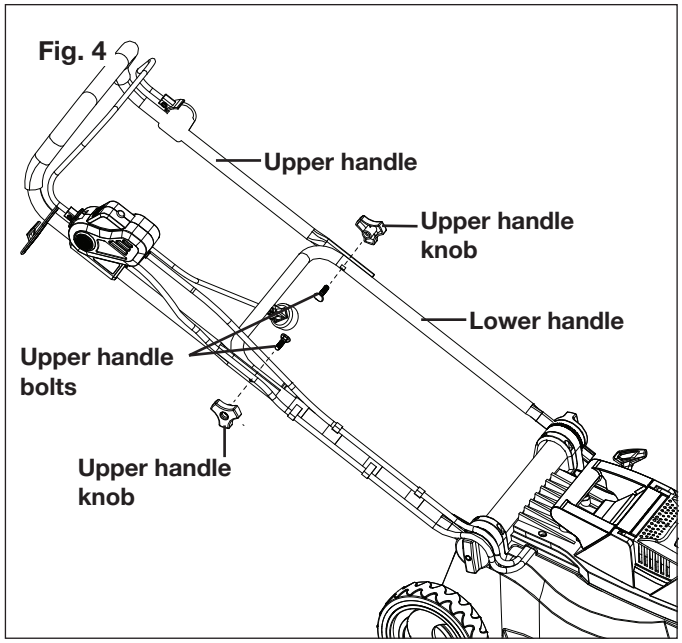

4. Turn the upper handle knobs clockwise to secure (Fig. 5).

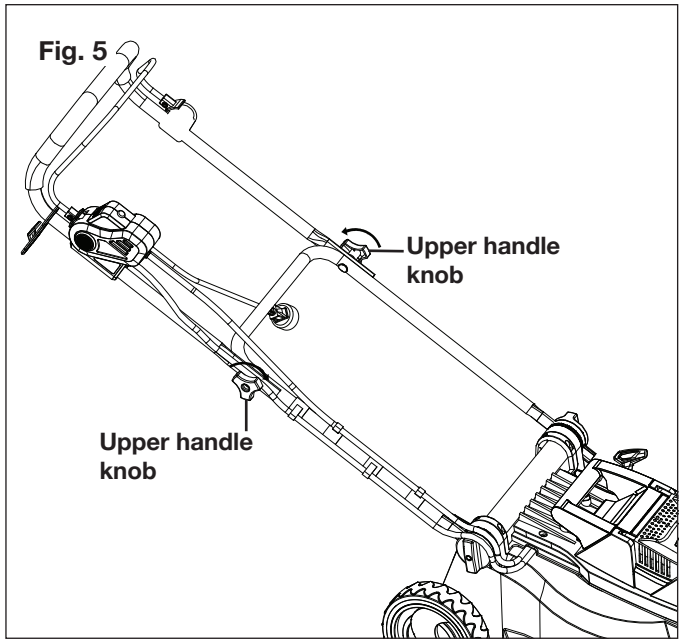

Fitting the Grass Bag

IMPORTANT! Before fitting the grass bag, ensure that the safety key has been pulled, the motor is switched off and the blade has come to a complete standstill.

1. Clip the protective plastic straps onto the support rod (Fig. 6).

Fig. 6

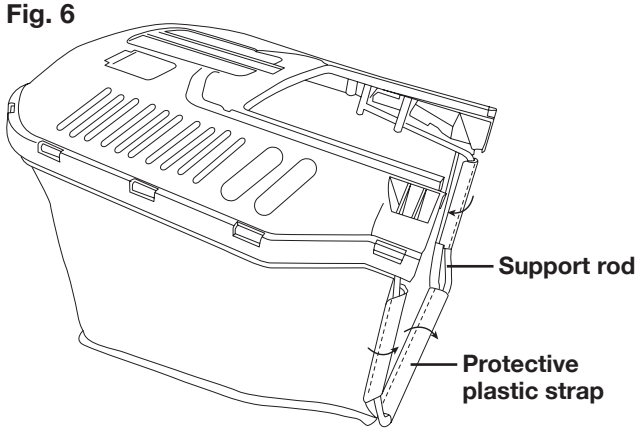

2. Lift the ejector flap with one hand.
3. With the other hand, hold the grass bag by the handle and hook it in from above (Fig. 7).

Fig. 7

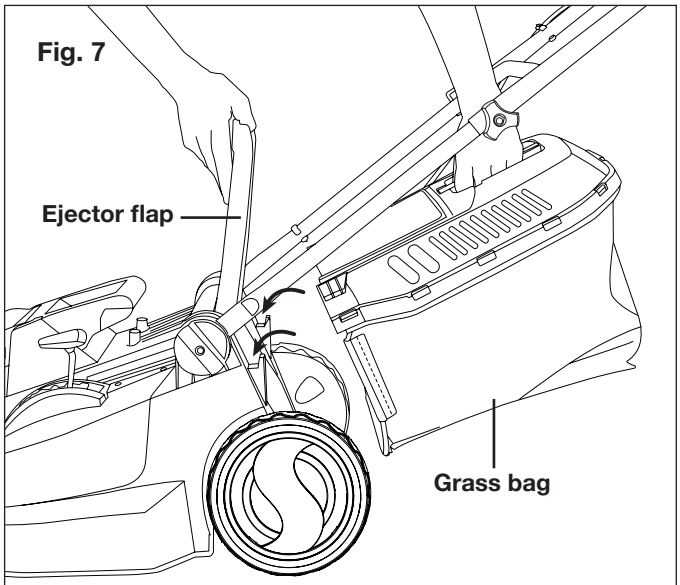

Battery Pack Operation

The mower is equipped with a lithium-ion battery.
The battery pack is completely closed and maintenance free.

Battery Charge Level Indicator

The battery pack is equipped with a push button for checking the charge level. Simply press the push button to read off the battery charge level from the LEDs of the battery indicator:

- All 3 level monitoring LEDs are lit: Battery charge level is high.
- 2 level monitoring LEDs are lit: Battery charge level is decreasing. Stop work as soon as possible.
- 1 level monitoring LED is lit: Battery is flat. Stop work IMMEDIATELY and charge the battery. Otherwise the battery's service life will be greatly shortened.

Lights	Light Indicators
◯	Charge level button
▮	The battery is at 30% capacity and requires charging
▮	The battery is at 60% capacity and requires charging soon
▮	The battery is at full capacity

NOTE: If the charge level button does not appear to be working, place the battery pack on the charger and charge as needed.

Immediately after using the battery pack, the charge level button may display a lower charge than it will if checked a few minutes later. The battery cells "recover" some of their charge after resting.

Charger Operation

⚠**WARNING!** Charge only iONMAX iBAT40 lithium-ion battery packs in compatible iONMAX iCHRG40 lithium-ion battery chargers. Other types of batteries may cause personal injury and damage.

To reduce the risk of electric shock, do not allow water to flow into the charger's AC/DC plug.

When to Charge the iONMAX iBAT40 Lithium-Ion Battery

NOTE: The iONMAX iBAT40 lithium-ion battery packs do not develop a "memory" when charged after only a partial discharge. Therefore, it is not necessary to run down the battery pack before placing it into the charger.

- Use the battery charge indicator lights to determine when to charge your iONMAX iBAT40 lithium-ion battery pack.
- You can "top-off" your battery pack's charge before starting a big job or after a long day of use.

Installing + Charging the Battery

1. Open the battery cover on the lawn mower by depressing the locking button found on the outside of the battery compartment (Fig. 8).

Fig. 8

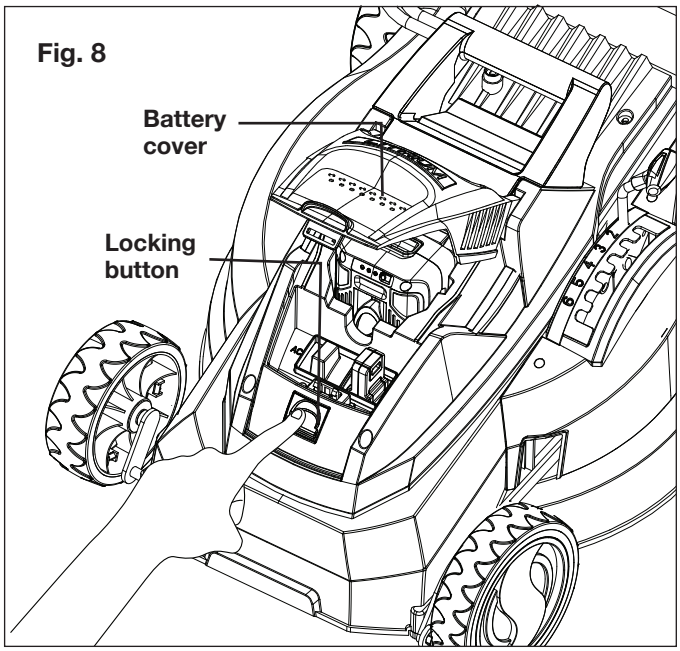

2. Pull the push lock button on the battery to pull the battery pack up and out of the equipment (Fig. 9).

Fig. 9

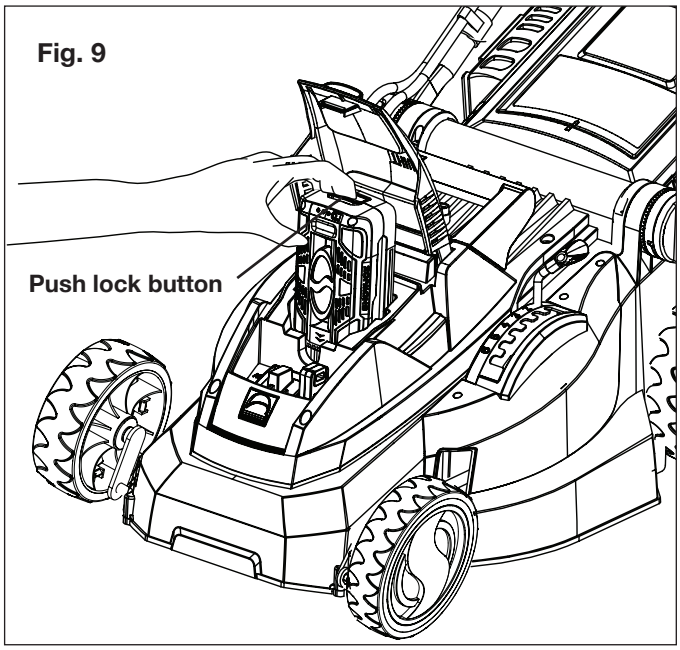

3. Check that the mains voltage is the same as that marked on the rating plate of the battery charger. Then, insert the charger's plug into the electrical wall outlet. When you plug in the charger, the top green light will illuminate and stay green (Fig. 10).

Fig. 10

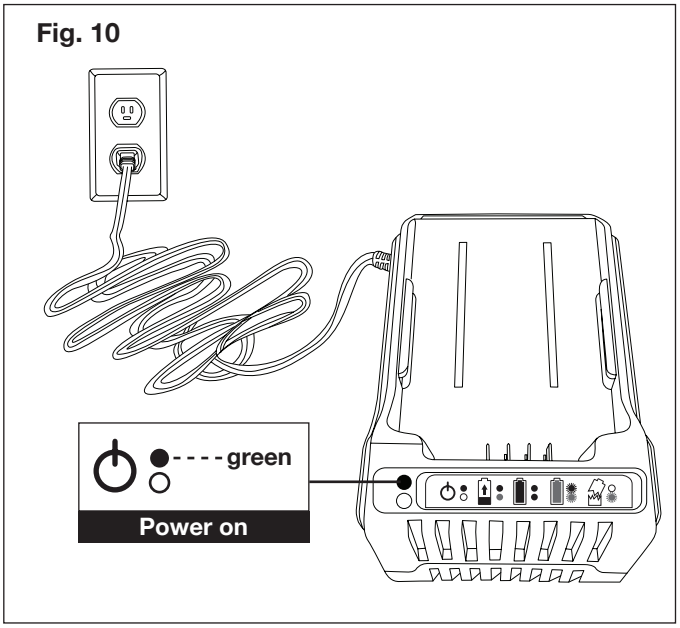

4. Place the battery pack into the charger by sliding the pack as shown to lock it into position. When you insert the battery into the charger, the bottom red light will illuminate to indicate that the battery is charging (Fig. 11).

5. When the bottom light turns green, the battery is fully charged (Fig. 11).

Fig. 11

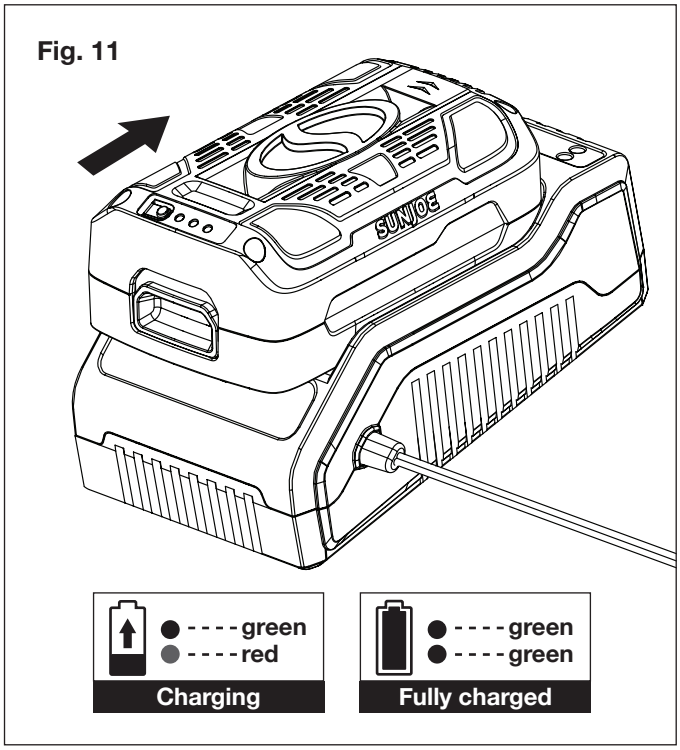

NOTE: An alternately flashing red and green light indicates a temperature abnormality (i.e. that the battery pack is either too hot or too cold). If there is only a red blinking light, this indicates that something is wrong with the battery. Contact Snow Joe® + Sun Joe® customer service at 1-866-SNOWJOE (1-866-766-9563).

Flashing green Flashing red	Flashing red only
Temperature abnormal	Something is wrong

6. A fully discharged pack with an internal temperature in the normal range will fully charge in 2.5 to 3 hours (between 32ºF/0ºC and 113ºF/45ºC). Heavily cycled battery packs may take longer to charge completely.
7. The battery charge indicator lights on the battery pack will display as the pack is charging to indicate the battery's capacity.
8. After charging is complete, the continuous green light will turn on and the charge level indicator on the battery will turn off.
9. If the charging light indicator alternately blinks red and green or the light indicator does not come on at all, check that the battery pack is fully seated into the bay. Remove the pack and reinsert. If the problem persists, contact the Snow Joe® + Sun Joe® customer service center at 1-866-SNOWJOE (1-866-766-9563) for assistance.
10. When charging is complete, remove the battery from the charger by pulling the push lock button and sliding the battery backward to unlock it from the charger (Fig. 12).

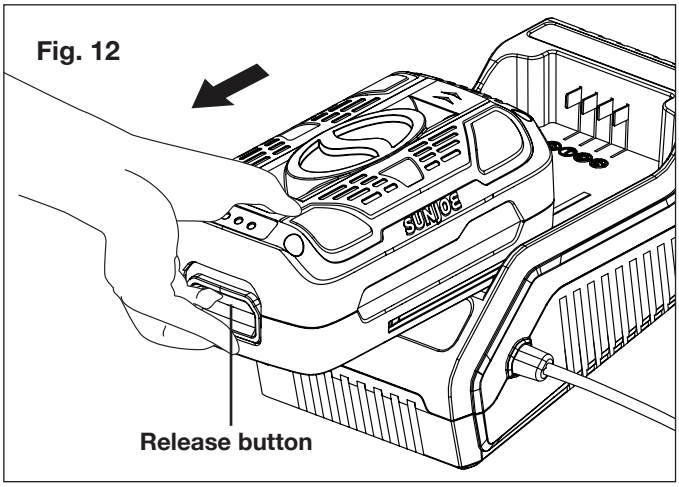

11. Timely recharging of the battery will help prolong the battery's life. You must recharge the battery pack when you notice a drop in the equipment's power.

IMPORTANT! Never allow the battery pack to become fully discharged as this will cause irreversible damage to the battery.

Charging a Hot or Cold Battery Pack

A red and green flashing indicator light on the charger indicates that the battery pack temperature is outside the charging range. Once the pack is within the acceptable range, normal charging will take place and the red light will be continuous. Hot or cold battery packs may take longer to charge.

Lithium-iON Charging Status		
Battery Pack Temperature	**Red Charger Indicator Light**	**Charging Status**
Too hot	Flashing	Not charging
Normal range	Continuous	Normal charging
Too cold	Flashing	Not charging

Operation

IMPORTANT! The lawn mower is equipped with a safety circuit to prevent unauthorized use. Directly before starting up the lawn mower insert the safety key into one of the slots found inside the battery housing (Fig. 13) and remove the safety key again whenever you interrupt or terminate your work.

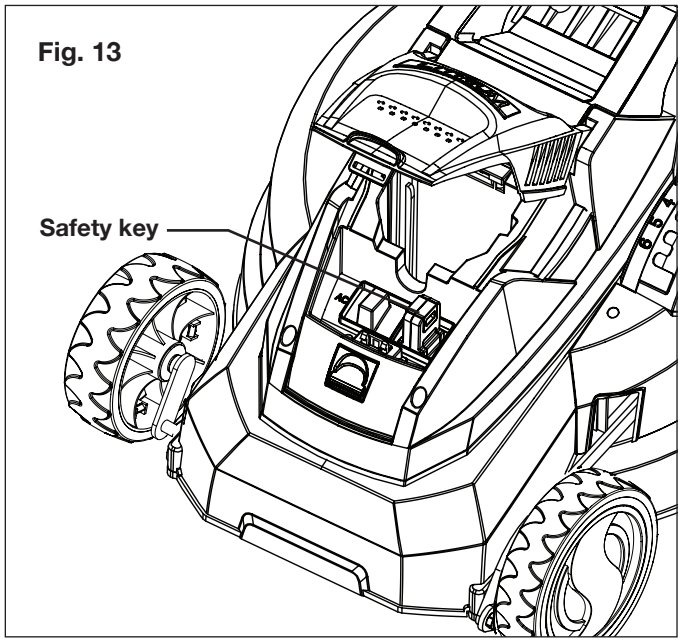

To prevent the equipment from switching on accidentally, the lawn mower is equipped with two safety switch buttons which must be pressed for either AC (electric) or DC (battery). Select the desired mode, push the corresponding button, then pull the switch bar lever.

Powering On + Off

NOTE: AC mode means the power is coming from the electrical outlet. DC mode means the power is coming from the lithium-ion battery.

If you are using AC (electric) power mode:

1. Push a loop of the extension cord through the slot on the cord lock from the opposite side of the restraint hook. Position the loop over the hook and pull the cable back through the slot (Fig. 14).

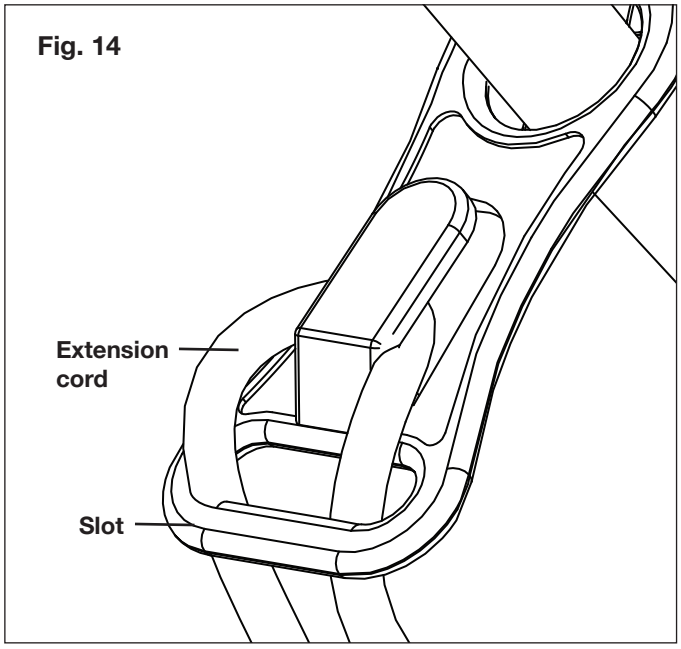

2. Insert the female end of the extension cord into the appliance's polarized male plug (Fig. 15).

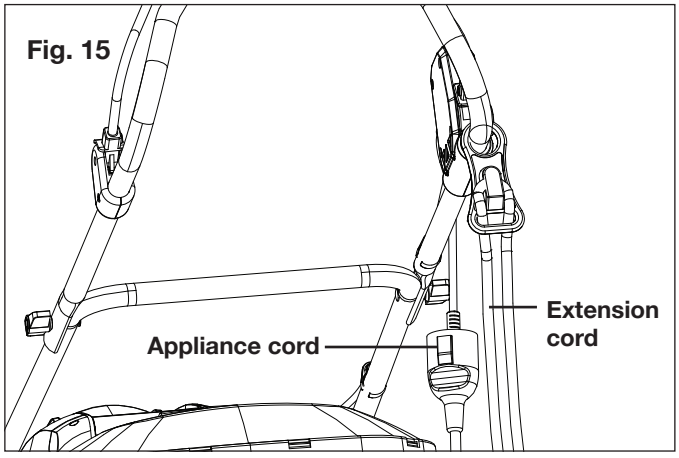

3. Make sure that the slot cover is over the DC slot, and insert the safety key into the AC slot (Fig. 16).

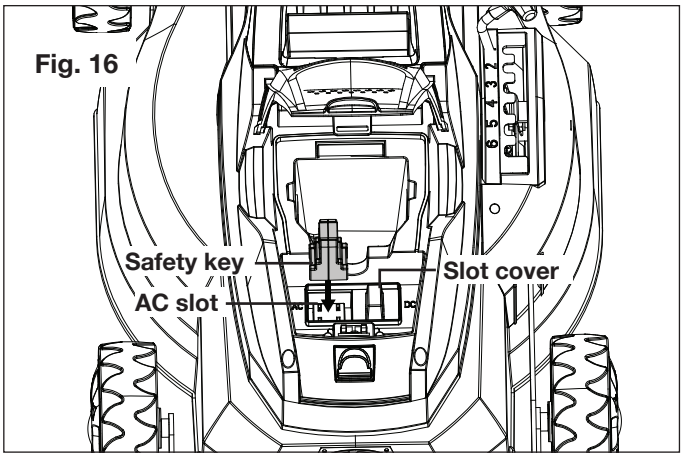

4. To power on, press the AC safety lock button located on the outside of the switch box, and pull the switch lever towards yourself while pressing the AC safety lock button. When the machine runs stably, you can release the AC safety lock button (Fig. 17).

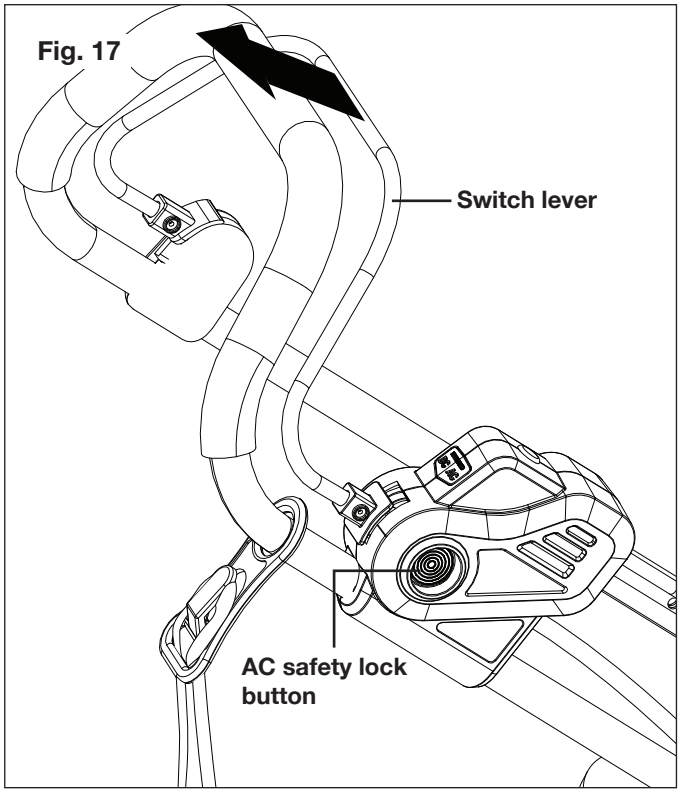

5. To power off the mower, simply release the switch lever.

If you are using DC (battery) power mode:

1. Open the battery compartment cover and slide the battery down to lock it into position (Fig. 18).

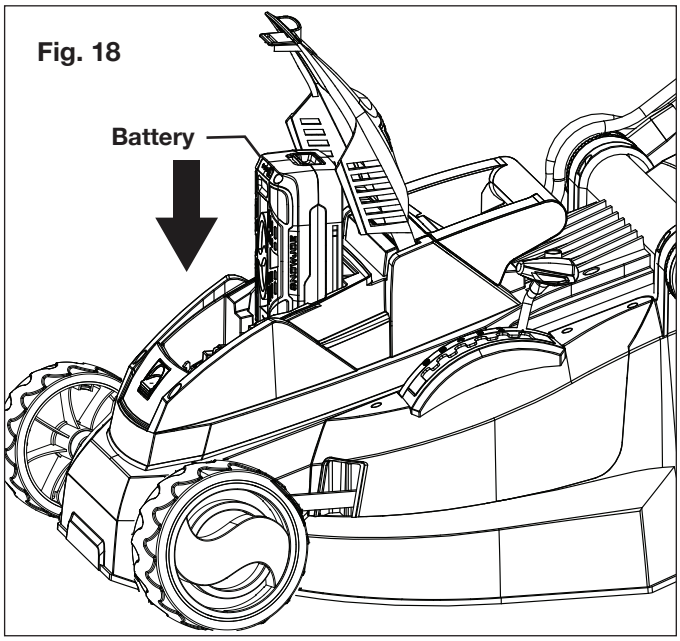

2. Make sure that the slot cover is over the AC slot, and insert the safety key into the DC slot (Fig. 19).

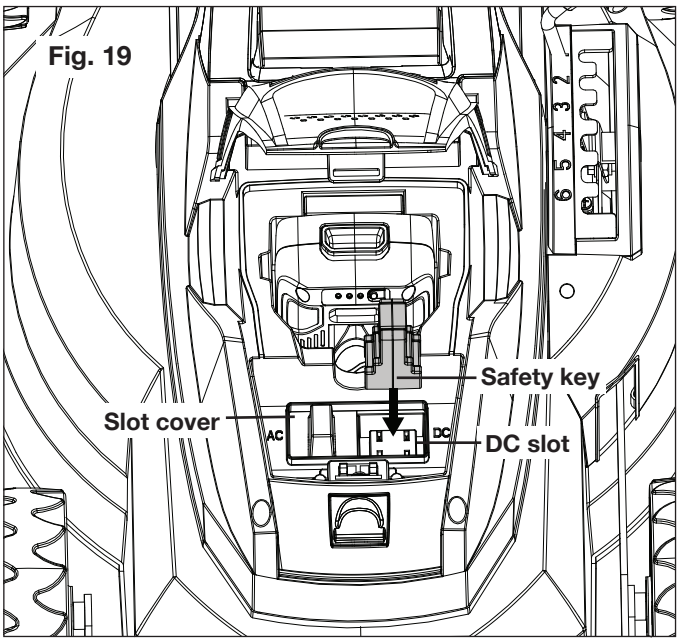

3. To power on, press the DC safety lock button located on the inside of the switch box, and pull the switch bar lever towards yourself while pressing the DC safety lock button. When the machine runs stably, you can release the DC safety lock button (Fig. 20).

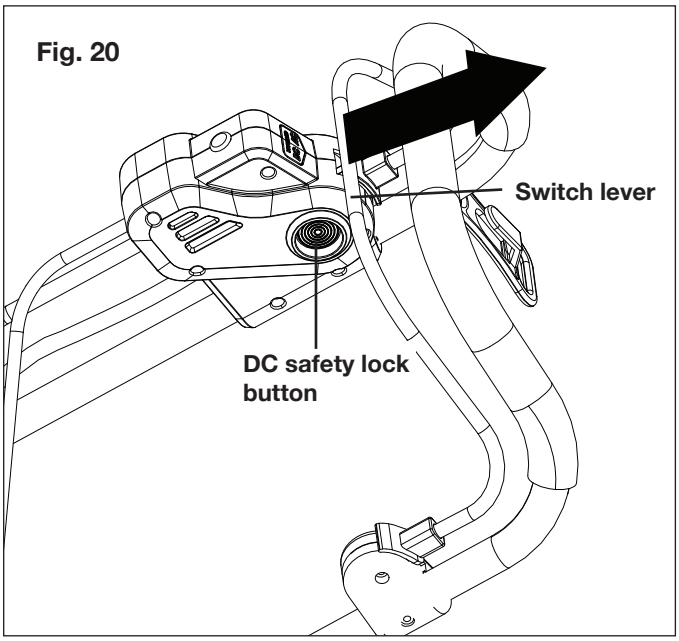

4. To power off the mower, simply release the switch lever.

Grass Bag Filling Level Indicator

1. The grass bag is equipped with a filling level indicator window that is opened by the airflow that the lawn mower generates during operation (Fig. 21).
2. If the flap closes during mowing, this indicates that the grass bag is full and must be emptied (Fig. 21).

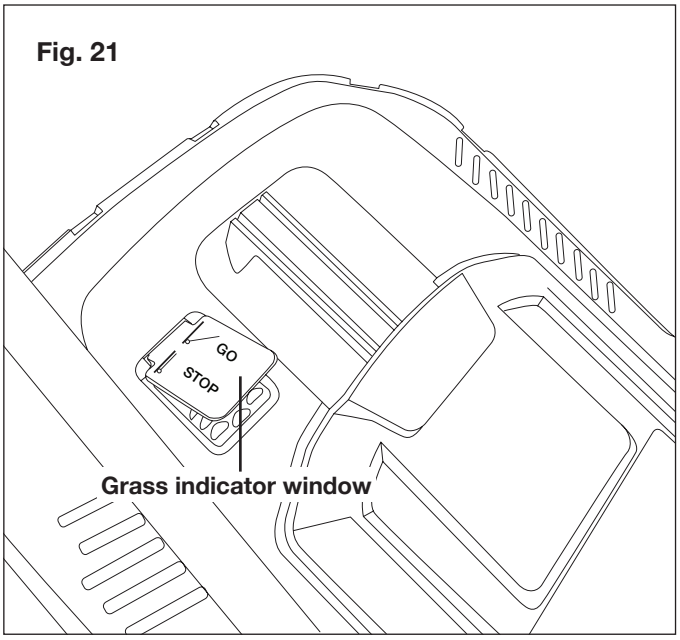

NOTE: To ensure that the filling level indicator functions properly, keep the holes under the flap clean and permeable.

Setting the Cutting Height

IMPORTANT! Before adjusting the cutting height, make sure the motor is switched off and the safety key has been pulled.

1. To set the cutting height on your lawn mower, pull out the cutting height adjustment lever, move the lever to the left or right and push it back into one of the six cutting positions indicated below. Make sure that the lever engages properly (Fig. 22).

   6-Position Height Adjustment:

   1. 1.18 in. (30 mm) **4.** 2.17 in. (55 mm)
   2. 1.38 in. (35 mm) **5.** 2.60 in. (66 mm)
   3. 1.77 in. (45 mm) **6.** 3.15 in. (80 mm)

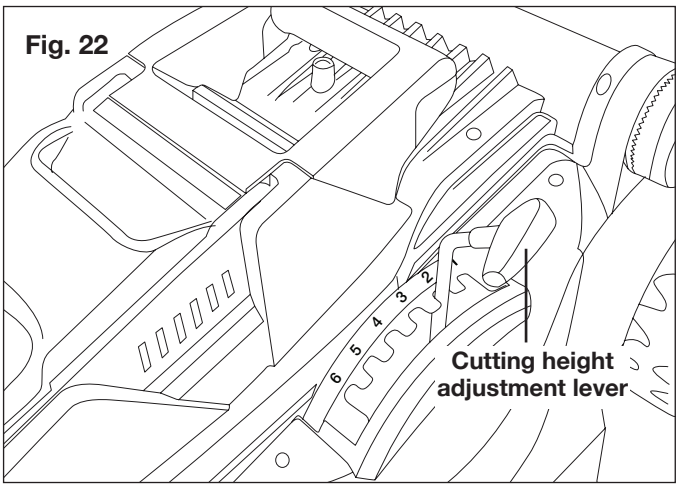

Before you begin to mow, check to ensure that the blade is not blunt and that none of the fasteners are damaged. To prevent any imbalance, replace blunt and/or damaged blades. To carry out this check, first switch off the motor and pull out the safety key.

Mowing Tips

⚠**WARNING!** Inspect the area prior to mowing and remove all the stones, sticks, wires and other foreign objects that could be picked up and thrown by the rotating blade. Failure to comply not only will damage the mower blade, but can also lead to serious personal injury.

- Be sure to check the mowing blade periodically for signs of wear and sharpen it at least once per year, as described in the maintenance section.

  NOTE: A sharp blade will greatly enhance the performance of the mower, especially when cutting tall blades of grass.
- When cutting thick grass, reduce your walking speed in order to allow for a more effective cut and a proper discharge of the clippings. For a healthy lawn, always cut off one-third or less from the total length of the grass. The average lawn should be approximately 1.5 in. to 2 in. (3.8 to 5 cm) long during cool months, and more than 2 in. (5 cm) long during hot months. If there is growth, the lawn should be cut in the fall.
- The lawn will look better if it is always cut to the same height and in alternate directions.
- When crossing any graveled surfaces, release the switch bar lever to turn off the mower. The stones can be picked up and thrown by the rotating blade.
- Set the mower to the highest cutting height when mowing on uneven ground or in tall weeds.

⚠**WARNING!** If you strike a foreign object, stop the motor and remove the safety key. Thoroughly inspect the mower and repair any damage before resuming work.

- **IMPORTANT!** Never open the ejector flap when the grass bag has been detached (to be emptied) and the motor is still running. A rotating blade can cause serious injuries!
- Always carefully fasten the ejector flap and grass bag. Switch off the motor before emptying the grass bag. Always ensure that a safe distance (provided by the length of the long handles) is maintained between the user and the mower housing. Be especially careful when mowing and changing direction on slopes and inclines.
- Maintain a solid footing and wear sturdy, non-slip footwear and long trousers. Always mow across an incline (not up and down).
- For safety reasons, the lawn mower may not be used to mow inclines with gradients exceeding 15 degrees.
- Use special caution when backing up and pulling the lawn mower towards you as such maneuvering of the machine poses a tripping hazard.

Cleaning, Maintenance + Ordering Spare Parts

⚠**WARNING!** Before cleaning, repairing, inspecting or carrying out any other maintenance work, ensure that the blade is not rotating and that the safety key has been disconnected.

Cleaning

- Keep all safety devices, air vents and the motor housing free of dirt and dust as best as possible.
- Wipe the equipment with a clean cloth or blow it with compressed air at low pressure.
- Clean the equipment immediately after use with a damp cloth and some soft, non-abrasive soap. Do not use cleaning agents or harsh solvents; these may damage the plastic parts in the equipment. Ensure that no water penetrates the equipment's interior.
- Do not clean the lawn mower with running water, particularly with high-pressure water.
- Keep the handles dry, clean and free of oil and grease.
- At the end of the season, perform a general inspection of the lawn mower and remove any grass, dirt or other debris that may have accumulated.
- At the start of each season, check the condition of the mower blade. If repairs are necessary, please call the Snow Joe® + Sun Joe® customer service center for assistance at 1-866-SNOWJOE (1-866-766-9563).

Servicing

- Ensure that all mounting components (i.e. screws, bolts, nuts etc.) are always tightened so that the equipment can be safely operated at all times.
- Frequently inspect the grass bag assembly for signs of wear and replace immediately with a genuine Snow Joe® + Sun Joe® part if damage is found.
- Replace excessively worn or damaged parts immediately.
- To maximize your mower's longevity, all screwed parts, including the wheels and axles, should be cleaned and lubricated.
- There are no parts inside the equipment which require additional maintenance or lubrication.

Replacing the Mower Blade

NOTE: The mower blade is sharp and can cause severe personal injury if handled incorrectly. Wrap the blade or wear protective gloves, and use extra caution when servicing.

- The cutting components are subjected to more wear and tear than any other components of the unit. Therefore, routinely check the condition of the blade and make sure that it is tightly fastened. If the blade is completely worn, it must be immediately replaced or resharpened.
- An excessively vibrating mower means that the blade is not properly balanced or has become deformed from striking an object. In this case, the blade must be repaired or replaced.
- For safety reasons, we recommend having the blade replaced or resharpened by an authorized Snow Joe® + Sun Joe® service center.

Ordering Replacement Parts

When servicing the mower, use only genuine replacement parts that are available from the manufacturer. In order to obtain replacement parts, visit our website at sunjoe.com or call our toll-free customer service helpline at 1-866-SNOWJOE (1-866-766-9563). The use of parts that do not meet the original equipment specifications may lead to improper performance of the lawn mower, may compromise operator safety and will void the manufacturer's warranty.

Storage

1. Remove the battery and the safety key from the lawn mower.
2. Clean the lawn mower as described in the cleaning section.
3. Inspect the mower carefully for worn, loose or damaged parts. Check connections and screws and tighten if necessary. Pay special attention to the mower blade and replace/sharpen if it shows signs of wear.
4. Store the mower indoors in a dry, clean and cool area out of the reach of children. Do not store the unit next to corrosive materials, such as fertilizer and rock salt.
5. Do not cover the lawn mower with a solid plastic sheet. Plastic coverings trap moisture around the mower, which can damage the unit.

Battery Caution + Disposal Information

Always dispose of your battery pack according to federal, state, and local regulations. Contact a recycling agency in your area for recycling locations.

⚠**CAUTION!** Even discharged battery packs contain some energy. Before disposing, use electrical tape to cover the terminals to prevent the battery pack from shorting, which could cause a fire or explosion.

⚠**WARNING!** To reduce the risk of injury or explosion, never burn or incinerate a battery pack even if it is damaged, dead or completely discharged. When burned, toxic fumes and materials are emitted into the surrounding atmosphere.

1. Batteries vary according to device. Consult your manual for specific information.
2. Install only new batteries of the same type in your product (where applicable).
3. Failure to insert batteries in the correct polarity, as indicated in the battery compartment or manual, may shorten the life of the batteries or cause batteries to leak.
4. Do not mix old and new batteries.
5. Do not mix Alkaline, Standard (Carbon-Zinc) or Rechargeable (Nickel Cadmium, Nickel Metal Hydride, or Lithium-Ion) batteries.
6. Do not dispose of batteries in fire.
7. Batteries should be recycled or disposed of as per state and local guidelines.

Service + Support

If your Sun Joe® iON16LM-HYB hybrid lawn mower requires service or maintenance, please call 1-866-SNOWJOE (1-866-766-9563) for assistance.

Model + Serial Numbers

When contacting the company, reordering parts or arranging service from an authorized dealer, you will need to provide the model and serial numbers, which can be found on the decal located on the housing of the unit. Copy these numbers into the space provided below.

Record the following numbers from the housing or handle of your new product:

Model #:

i	O	N	1	6	L	M	-	H	Y	B						

Serial #:

iCHRG40

Federal Communications Commission (FCC)

⚠**WARNING!** Any changes or modifications to this unit not expressly approved by the party responsible for compliance could void the user's authority to operate the equipment.

Class B device:

NOTE: This equipment has been tested and found to comply with the limits for a Class B digital device, pursuant to part 15 of the FCC Rules.

These limits are designed to provide reasonable protection against harmful interference in a residential installation.

This equipment generates, uses and can radiate radio frequency energy and, if not installed and used in accordance with the instructions, may cause harmful interference to radio communications.

However, there is no guarantee that interference will not occur in a particular installation.

If this equipment does cause harmful interference to radio or television reception, which can be determined by turning the equipment off and on, the user is encouraged to try to correct the interference by one or more of the following measures:

- Reorient or relocate the receiving antenna.
- Increase the separation between the equipment and receiver.
- Connect the equipment into an outlet on a circuit different from that to which the receiver is connected.
- Consult the dealer or an experienced radio/TV technician for help.

Troubleshooting

Fault	Possible Cause	Remedy
Motor does not start	**a)** Capacitor defective **b)** Battery pack empty **c)** Cable defective **d)** Switch/plug block defective **e)** Motor terminals or capacitor disconnected **f)** Mower standing in high grass **g)** Mower housing is clogged **h)** Safety key is not inserted **i)** Battery is not correctly inserted	**a)** Contact an authorized service center **b)** Charge battery pack **c)** Check the cable **d)** Contact an authorized service center **e)** Contact an authorized service center **f)** Start motor on shorter grass or previously mowed area; change cutting height if necessary **g)** Clean housing so that the blade can run freely **h)** Insert safety key into one of the slots **i)** Remove the battery and reinsert
Motor performance drops	**a)** Grass too tall or damp **b)** Mower housing is clogged **c)** Blades badly worn **d)** Battery performance decreasing	**a)** Correct the cutting height **b)** Clean housing **c)** Replace blades **d)** Check the battery performance and charge the battery if necessary
Unclean cuts	**a)** Blades worn **b)** Wrong cutting height	**a)** Replace or resharpen the blade; contact an authorized service center **b)** Correct the cutting height

IMPORTANT! For protection, the motor is equipped with a thermal switch that cuts out when the motor is overloaded and switches on again automatically after a short cooling period.

Optional Accessories

⚠**WARNING!** ALWAYS use only authorized Snow Joe® + Sun Joe® replacement parts and accessories. NEVER use replacement parts or accessories that are not intended for use with this tool. Contact Snow Joe® + Sun Joe® if you are unsure whether it is safe to use a particular replacement part or accessory with your tool. The use of any other attachment or accessory can be dangerous and could cause injury or mechanical damage.

Accessories	Item	Model
① 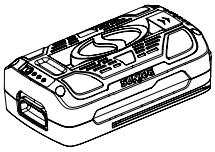	iONMAX 40 V 4.0 Ah Lithium-Ion Battery *Battery Charge Time Max*: *iCHRG40: 3 hours* *iCHRG40-DPC: 3.5 hours* *Battery Run Time Max: 25 min*	iBAT40
② 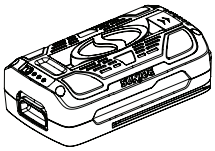	iONMAX 40 V 5.0 Ah PRO SERIES Lithium-Ion Battery *Battery Charge Time Max:* *iCHRG40: 3.5 hours* *iCHRG40-DPC: 4 hours* *Battery Run Time Max: 33 min*	iBAT40XR
③ 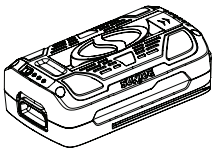	iONMAX 40 V 6.0 Ah PRO SERIES Lithium-Ion Battery *Battery Charge Time Max*: *iCHRG40: 5 hours* *iCHRG40-DPC: 5.5 hours* *Battery Run Time Max: 38 min*	iBAT40XRP
④ 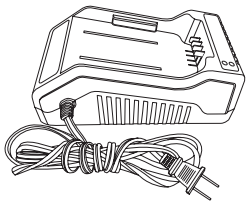	iONMAX 40 V Lithium-Ion Battery Charger	iCHRG40
⑤ 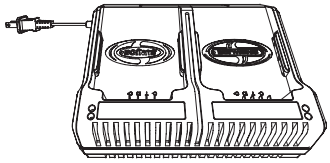	iONMAX 40 V Lithium-Ion Dual Port Battery Charger	iCHRG40-DPC
⑥ 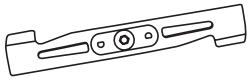	15-Inch Mower Blade	iON16LM-BLD
⑦ 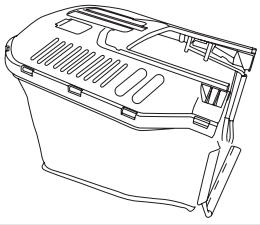	9.25 gal (35 l) Grass Bag	iON16LM-BAG

NOTE: Accessories are subject to change without any obligation on the part of Snow Joe® + Sun Joe® to provide notice of such changes. Accessories can be ordered online at sunjoe.com or via phone by contacting the Snow Joe® + Sun Joe® customer service center at 1-866-SNOWJOE (1-866-766-9563).

NOTE

NOTE

NOTE

SNOW JOE® + SUN JOE® CUSTOMER PROMISE

ABOVE ALL ELSE, Snow Joe® + Sun Joe® are dedicated to you, our customer. We strive to make your experience as pleasant as possible. Unfortunately, there are times when a product does not work or breaks under normal operating conditions. We think it's important that you know what you can expect from us. That's why we created the Snow Joe® + Sun Joe® promise.

OUR PROMISE: Snow Joe® + Sun Joe® warrant new products for two years from the date of purchase. If your product does not work, or there's an issue with a specific part, we will fix this by either sending you a free replacement part or by sending you a new or comparable product at no charge. How cool is that! Before you know it, you'll be back in action cutting, sawing, mowing, washing and…?

PRODUCT REGISTRATION:

Snow Joe®, LLC ("Snow Joe® + Sun Joe®") strongly encourages you to register your purchase. You can register online at **snowjoe.com/ProductRegistration**, or by printing and mailing in a registration card available online from our website, or calling our Customer Service Department at **1-866-SNOWJOE (1-866-766-9563)**, or by e-mailing us at **help@snowjoe.com**. Failure to register your product purchase will not diminish your warranty rights. However, registering your purchase will allow Snow Joe® + Sun Joe® to better serve you with any of your customer service needs.

WHO CAN SEEK WARRANTY COVERAGE?

This Warranty is extended by Snow Joe® + Sun Joe® to the owner of this Machine (a "Machine" consists of a product powered by a motor) for residential and personal household use only. This Warranty does not apply to products used for commercial, rental or re-sale purposes. Should ownership of this machine change during the 2-year period, please update the Machine's owner information at **snowjoe.com/ProductRegistration**.

WHAT IS COVERED?

Snow Joe® + Sun Joe® warrants to the owner that if this Machine fails within 2 years from the date of purchase due to a defect in material or workmanship or as a result of normal wear and tear from ordinary household use, Snow Joe® + Sun Joe® will send a replacement part or product, as needed, free of charge and with free shipping to the original purchaser.

If, in Snow Joe® + Sun Joe®'s sole discretion, the failed Machine cannot be repaired with a part, Snow Joe® + Sun Joe® will elect to either (A) send a new Machine at no charge and with free shipping or (B) refund the full purchase price to the owner.

WHAT IS NOT COVERED?

This Warranty does not apply to the Machines that have been used commercially or in non-household applications. This Warranty does not cover cosmetic changes that do not affect performance. This Warranty is only valid if the Machine is used and maintained in accordance with the instructions, warnings and safeguards contained in the owner's manual. Snow Joe® + Sun Joe® will not be responsible for the cost of any unauthorized warranty repairs. This warranty does not cover any cost or expense incurred by the purchaser in providing substitute equipment or service during reasonable periods of malfunction or non-use of this product while waiting for a replacement part or unit under this warranty.

Wearing parts like belts, augers, chains and tines are not covered under this warranty, and can be purchased at **snowjoe.com** or by calling **1-866-SNOWJOE (1-866-766-9563)**. Batteries are covered in full for 90-days from the date of purchase.

Repair, replacement or refund of the purchase price are the exclusive remedies of purchaser and the sole liability of Snow Joe® + Sun Joe® under this warranty. No employee or representative of Snow Joe® + Sun Joe® is authorized to make any additional warranty or any modification to this warranty which may be binding upon Snow Joe® + Sun Joe®. Accordingly, purchaser should not rely upon any additional statements made by any employee or representative of Snow Joe® + Sun Joe®. In no event, whether based on contract, indemnity, warranty, tort (including negligence), strict liability or otherwise, shall Snow Joe® + Sun Joe® be liable for any special, indirect, incidental, or consequential damages, including, without limitation, loss of profit or revenue.

Some states do not allow limits on warranties. In such states, the above limitations may not apply to you.

Outside the USA, other warranties may apply.



sunjoe.com